PACE® INCORPORATED

ISO 9001 CERTIFIED

PRC 2000-2M SYSTEMS

PARTS LIST

SERVICE MANUAL ADDENDUM

MANUAL NO. 5050-0373

REV. D

BLANK

INTRODUCTION

This addendum contains information necessary to identify replacement parts required to maintain the PRC 2000-2M System.

MAJOR UNITS AND ASSEMBLIES

Table 1. Lists the major units and assemblies comprising the PRC 2000-2M System and the corresponding page numbers.

PARTS LIST

The Parts List is arranged in major assembly sequence. Subassemblies and components within each assembly are listed in index number order. Index numbers for items having reference will not be shown on the figure illustrating assembly.

INDEX NUMBER

Items are identified by index numbers. These numbers are used in the corresponding illustration to identify the part.

REFERENCE NUMBER

This column lists the complete reference number for the listed item. Reference numbers for assemblies and parts of the PRC 2000-2M System reflect those items identified in schematic diagrams located in the Service Manual and PC Board Troubleshooting Service Manual.

PART NUMBER

The part numbers listed in the Part Number column are assigned by the manufacturer.

DESCRIPTION

The description column provides descriptive data of the parts.

FEDERAL SUPPLY CATALOG OF MANUFACTURERS (FSCM)

This column identifies the commercial (manufacturer) or government entity responsible for the item.

QUANTITY

This column identifies the quantity of items used in or to attach the next higher assembly.

SCHEMATICS AND WIRE DIAGRAMS

Table 2. Lists the Schematics and Wire Diagrams of the PRC 2000 power source and the HS 150 HotSpot System.

REF. NO.	PART NO.	DESCRIPTION	PAGE NO.
1	7908-0187	Power Source, PPS 400, 115V W/Accessories	6
1A1	7008-0187	Power Source, PPS 400, 115V	10
1A2	6021-0006	Cleaning Station, SMT	60
1A3	6008-0115	Foot Pedal, Treadline	66
1A4	6910-0077	Extractor, Solder, SX-70 W/Accessories	68
1A5	6925-0014	Sodr-Pen, 21V 48W, SP-2 W/Accessories	82
1A6	7923-0002	ThermoJet, Mini, TJ-70	88
1A7	7924-0001	ThermoPik, TP-65 W/Accessories	94
1A8	7925-0001	ThermoTweez, TT-65 W/Accessories	102
1A9	7926-0001	MicroChine, MC-65	112
1A10	7027-0001-P1	Pik-Vac, PV-65	122
1A11	7909-0005	ResisTweez, TW-15 W/Accessories	126
1A12	7012-0002-P1	StripTweez Handpiece, TS-15	134
1A13	7913-0004-02	LapFlo, LF-15 W/Accessories	138
1A14	7920-0001	ConducTweez Handpiece, CT-15 W/Accessories	142
1A15	6993-0152	Kit, Paste Dispenser	148
1MP1	6993-0166	Kit, Handle, Power Source	150
1MP2	6019-0043	Kit, Stand, Tip & Tool, SP	152
1MP3	6019-0044	Kit, Stand, Tip & Tool, SX	154
1MP4	6019-0046	Kit, Stand, Tip & Tool, TT	156
1MP5	6019-0038	Cubby, Paste Dispenser	158
1MP6	6019-0022	Cubby, SMR	160
1MP7	1257-0186-P1	Stand, Chart Holder W/Mt. Hardware	162
1MP8	6019-0023	Redi-Rak, Handpiece	164
1MP9	6021-0007	Redi-Rak, Tip	166
1W1	1332-0094	Power Cord, Detachable, Domestic	168
1W2	7000-0023	Power Cord, Universal Detach., Spade Lug	170
2	8040-0001	HotSpot, HS 150 W/Accessories	172
2A1	7040-0002	HotSpot, HS 150	174
2A2	6040-0002	Assembly, Clamp Arm	200
2A3	6993-0102	Assembly, Thermal Selectivity	202

Table 1. List Of Major Units And Assemblies

ITEM NO.	DESCRIPTION	PAGE NO.
1	PRC 2000 Wiring Diagram	204
2	PRC 2000 Microprocessor Board Schematic	206
3	PRC 2000 Multifunction Board Schematic	210
4	PRC 2000 Display Board Schematic	216
5	HS 150 Wiring Diagram	217
6	HS 150 Main Board Schematic	218
7	HS 150 Display Board Schematic	221

Table 2. Schematics And Wire Diagrams

PACE® INCORPORATED

PROPRIETARY PARTS LIST

The data in this proposal shall not be used or disclosed, except for evaluation purposes, provided that if a contract is awarded to this submitter as a result of or in connection with the submission of this proposal, the Government shall have the right to use or disclose this technical data to the extent provided in the contract. This restriction does not limit the Government's right to use or disclose any technical data which is not proprietary to the submitter or is obtained from another source without restriction.

DWG. NO: R8007-0161

TITLE: PRC 2000-2M SYSTEM

REV: A EC NO: 3759 DATE: 3/4/94
AMENDED P/L FORMAT: 8/23/94
B EC NO: 4083 DATE: 08/11/95

APP:

INDEX	REFERENCE NO.	PART NO.	DESCRIPTION	FSCM	QTY
REF		8007-0161	PRC 2000-2M SYSTEM	17794	REF
1	1	7908-0187	POWER SOURCE, PPS 400, 115V W/ACCESSORIES	17794	1
2	2	8040-0001	HOT SPOT 150 W/ACCESSORIES	17794	1

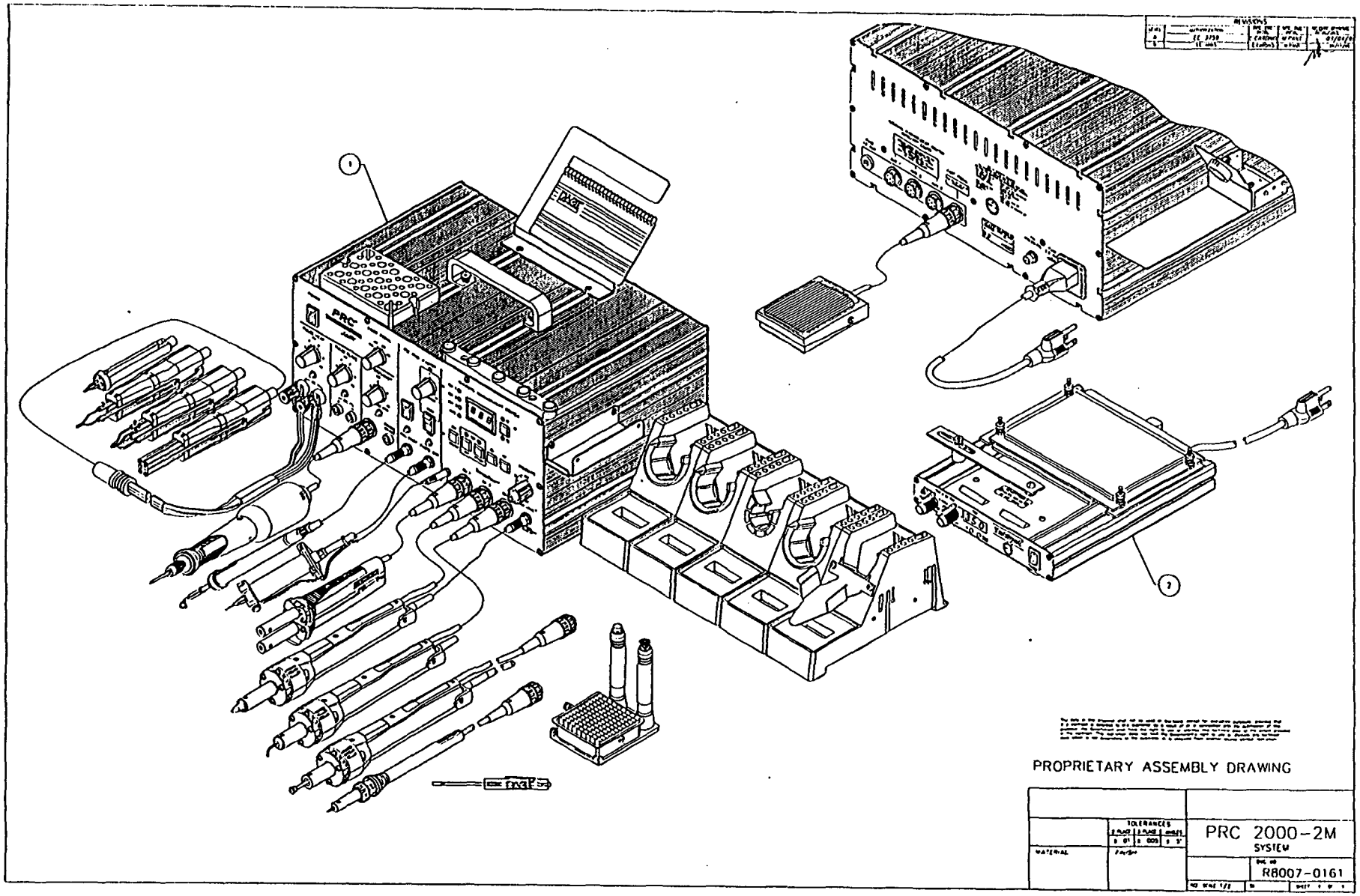
REVISIONS
PROPRIETARY ASSEMBLY DRAWING
TOLERANCES
MATERIAL
FINISH
PRC 2000-2M
SYSTEM
R8007-0161

PACE® INCORPORATED

PROPRIETARY PARTS LIST

The data in this proposal shall not be used or disclosed, except for evaluation purposes, provided that if a contract is awarded to this submitter as a result of or in connection with the submission of this proposal, the Government shall have the right to use or disclose this technical data to the extent provided in the contract. This restriction does not limit the Government's right to use or disclose any technical data which is not proprietary to the submitter or is obtained from another source without restriction.

DWG. NO: R7908-0187

REV: A EC NO: 3759 DATE: 3/4/94

AMENDED P/L FORMAT: 8/23/94

B EC NO: 4083 DATE: 08/11/95

APP:

TITLE: POWER SOURCE, PPS 400, 115V W/ACCESSORIES

INDEX	REFERENCE NO.	PART NO.	DESCRIPTION	FSCM	QTY
REF	1	7908-0187	POWER SOURCE, PPS 400, 115V W/ACCESSORIES	17794	REF
1	1A1	7008-0187	POWER SOURCE, PPS 400, 115V	17794	1
2	1A2	6021-0006	CLEANING STATION, SMT	17794	1
3	1A3	6008-0115	FOOT PEDAL, TREADLINE	17794	1
4	1A4	6910-0077	EXTRACTOR, SOLDER, SX-70 W/ACCESSORIES	17794	1
5	1A5	6925-0014	SODR-PEN, 21V 48W, SP-2 W/ACCESSORIES	17794	1
6	1A6	7923-0002	THERMOJET, MINI, TJ-70	17794	1
7	1A7	7924-0001	THERMOPIK, TP-65 W/ACCESSORIES	17794	1
8	1A8	7925-0001	THERMOTWEEZ, TT-65 W/ACCESSORIES	17794	1
9	1A9	7926-0001	MICROCHINE, MC-65	17794	1
10	1A10	7027-0001-P1	PIK-VAC, PV-65	17794	1
11	1A11	7909-0005	RESISTWEEZ, TW-15 W/ACCESSORIES	17794	1
12	1A12	7012-0002-P1	STRIPTWEEZ HANDPIECE, TS-15	17794	1
13	1A13	7913-0004-02	LAPFLO, LF-15 W/ACCESSORIES	17794	1
14	1A14	7920-0001	CONDUCTWEEZ HANDPIECE, CT-15 W/ACCESSORIES	17794	1
15	1A15	6993-0152	KIT, PASTE DISPENSER	17794	1
16	1MP1	6993-0166	KIT, HANDLE, POWER SOURCE	17794	1
17	1MP2	6019-0043	KIT, STAND, TIP & TOOL, SP	17794	1
18	1MP3	6019-0044	KIT, STAND, TIP & TOOL, SX	17794	3
19	1MP4	6019-0046	KIT, STAND, TIP & TOOL, TT	17794	1
20	1MP5	6019-0038	CUBBY, PASTE DISPENSER	17794	1
21	1MP6	6019-0022	CUBBY, SMR	17794	1
22	1MP7	1257-0186-P1	STAND, CHART HOLDER W/MTG.HARDWARE	17794	1
23	1MP8	6019-0023	REDI-RAK, HANDPIECE	17794	1
24	1MP9	6021-0007	REDI-RAK, TIP	17794	1
25	1W1	1332-0094 17251	POWER CORD, DETACHABLE, DOMESTIC	17794 1BU49	1
26	1W2	7000-0023	POWER CORD, UNIVERSAL, DETACH., SPADE LUG	17794	1

DWG. NO: R7908-0187

REV: A EC NO: 3759 DATE: 3/4/94 APP:

AMENDED P/L FORMAT: 8/23/94

TITLE: POWER SOURCE, PPS 400, 115V W/ACCESSORIES

B EC NO: 4083 DATE: 08/11/95

INDEX	REFERENCE NO.	PART NO.	DESCRIPTION	FSCM	QTY
27		1100-0230	SCREWDRIVER, PACE	17794	1
28		6050-0001	INST. MANUAL W/BINDER PRC 2000	17794	1
29		5050-0344	MANUAL, SERVICE, PRC 2000 SYSTEM	17794	1
30		5050-0365	ADDENDUM, SERVICE MANUAL,PCB TROUBLESHOOT	17794	1
31		5050-0251	CHART, TIP & TEMP	17794	1

BLANK

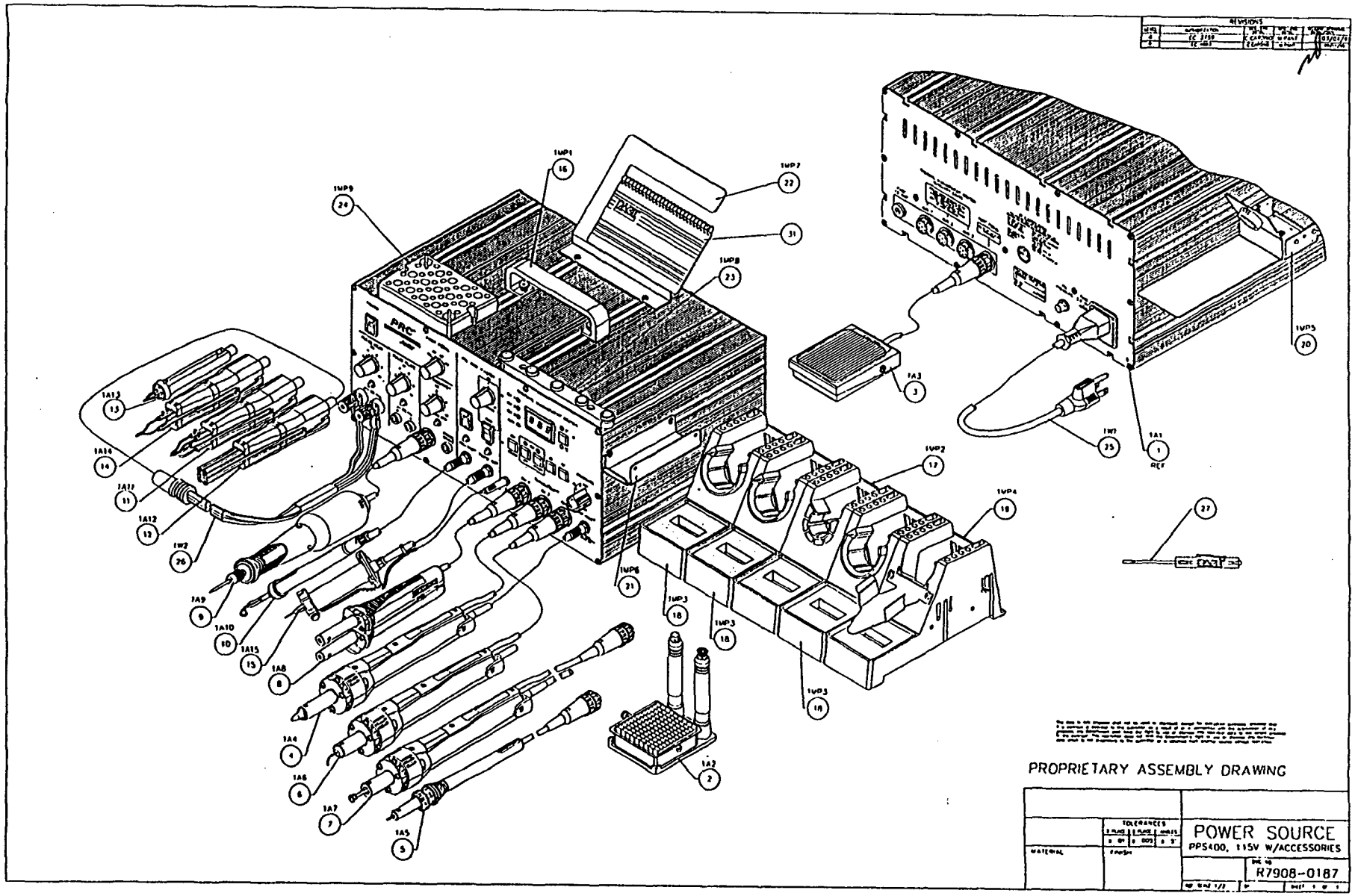
REVISIONS
1MP1
16
1MP7
22
31
1MP9
24
1MP8
23
1MP5
20
1A3
3
1W7
25
1A1
1
REF
1A13
13
1A14
14
1A11
11
1A12
12
1W2
26
1A9
9
1A10
10
1A15
15
1A8
8
1A4
4
1A6
6
1A7
7
1A5
5
1MP6
21
1MP3
18
1MP3
18
1A2
2
1MP2
17
1MP4
19
1MP3
19
27
PROPRIETARY ASSEMBLY DRAWING
TOLERANCES
MATERIAL
FINISH
POWER SOURCE
PPS400, 115V W/ACCESSORIES
DWG NO
R7908-0187
A002 1 7908-0187

PACE® INCORPORATED

PROPRIETARY PARTS LIST

The data in this proposal shall not be used or disclosed, except for evaluation purposes, provided that if a contract is awarded to this submitter as a result of or in connection with the submission of this proposal, the Government shall have the right to use or disclose this technical data to the extent provided in the contract. This restriction does not limit the Government's right to use or disclose any technical data which is not proprietary to the submitter or is obtained from another source without restriction.

DWG. NO: R7008-0187

TITLE: POWER SOURCE, PPS 400, 115V

REV: A EC NO: 3759 DATE: 3/4/94
AMENDED P/L FORMAT: 8/23/94
REV: B EC NO: 4083 DATE: 08/11/95

APP:

INDEX	REFERENCE NO.	PART NO.	DESCRIPTION	FSCM	QTY
REF	1A1	7008-0187	POWER SOURCE, PPS 400, 115V	17794	REF
1	1A1A1	1336-0028	MOTOR PUMP ASSY (PUMP 1)	17794	1
2	1A1A2	1336-0027	MICROPUMP ASSY, PPS 400 (PUMP 2)	17794	1
3	1A1A3	1338-0072	PUMP ASSY, LOW PRESSURE, 21V (PUMP 3)	17794	1
4	1A1A4	6020-0074	PCB, MULTIFUNCTION, PPS 400	17794	1
5	1A1A5	6020-0072	PCB, MICROPROCESSOR, PPS 400	17794	1
6	1A1A6	6020-0073	PCB,DISPLAY, PPS 400	17794	1
7	1A1BR1	1196-0012	RECTIFIER, BRIDGE,25A,200V(BR1)	17794	1
		GENERIC		ZZZ	
8	1A1C1	1181-0117	CAPACITOR, ELECTR., 33000uF, 25V (C1)	17794	1
		3186BC333U025AM		59821	
		KME25LG333T35 X 100		62643	
		DCM333T025AB2A		93790	
9	1A1C2	1181-0116	CAPACITOR, ELECTR., 22000uF, 25V (C2)	17794	1
		3186BC333U025AM		59821	
		KME25LG333T35 X 100		62643	
		DCM333T025AB2A		93790	
10	1A1CB1	1159-0263	CIRCUIT BREAKER, AUTO RESET, 1.5A 250VAC (CB1)	17794	1
		46-500-P10-1.5A		06402	
11A	1A1D1	1183-0046	DIODE, LED, RED/GREEN, T-1 3/4 (LED1)	17794	1
		L-59EGW		ZZZ	
		LT2482-23		ZZZ	
		SSL-LX5099-IGW/R		1EM90	
11B	1A1D2	1183-0046	DIODE, LED, RED/GREEN, T-1 3/4 (LED2)	17794	1
		L-59EGW		ZZZ	
		LT2482-23		ZZZ	
		SSL-LX5099-IGW/R		1EM90	

DWG. NO: R7008-0187

REV: A EC NO: 3759 DATE: 3/4/94 APP:

AMENDED P/L FORMAT: 8/23/94

TITLE: POWER SOURCE, PPS 400, 115V

REV: B EC NO: 4083 DATE: 08/11/95

INDEX	REFERENCE NO.	PART NO.	DESCRIPTION	FSCM	QTY
11C	1A1D3	1183-0046 L-59EGW LT2482-23 SSL-LX5099-IGW/R	DIODE, LED, RED/GREEN, T-1 3/4 (LED3)	17794 ZZZ ZZZ 1EM90	1
11D	1A1D4	1183-0046 L-59EGW LT2482-23 SSL-LX5099-IGW/R	DIODE, LED, RED/GREEN, T-1 3/4 (LED4)	17794 ZZZ ZZZ 1EM90	1
11E	1A1D5	1183-0046 L-59EGW LT2482-23 SSL-LX5099-IGW/R	DIODE, LED, RED/GREEN, T-1 3/4 (LED5)	17794 ZZZ ZZZ 1EM90	1
12A	1A1E1	1349-0037 2-36154	LUG, RING, #10, INS., 22-16 AWG	17794 09769	2
12B	1A1E2	1349-0037 2-36154	LUG, RING, #10, INS., 22-16 AWG	17794 09769	2
13A	1A1E3	1349-0039 2-34161-1	LUG, RING, #10, INS., 16-14 AWG	17794 09769	1
13B	1A1E4	1349-0039 2-34161-1	LUG, RING, #10, INS, 16-14 AWG	17794 09769	1
14	1A1E5	1349-0253 ST-181-00	SOLDER SLEEVE, 22-26 AWG	17794 06090	1
15	1A1E6	1348-0550 1496	LUG, SOLDER, 1/4" ID	17794 83330	2
16	1A1F1	1159-0253 34.3914	FUSE, 5.0A, TIME LAG, 5 X 20MM, UL (F1)	17794 61935	1
17	1A1F2	1159-0257 3AG12 311012	FUSE, 12A, FAST, 1/4" X 1 1/4", UL (F2)	17794 92912 7E222	1
18A	1A1H1	1415-0007 GENERIC	LOCKWASHER, 5/16", INT. TOOTH	17794 ZZZ	1
18B	1A1H2	1415-0007 GENERIC	LOCKWASHER, 5/16", INT. TOOTH	17794 ZZZ	1

DWG. NO: R7008-0187 REV: A EC NO: 3759 DATE: 3/4/94 APP:

AMENDED P/L FORMAT: 8/23/94

TITLE: POWER SOURCE, PPS 400, 115V REV: B EC NO: 4083 DATE: 08/11/95

INDEX	REFERENCE NO.	PART NO.	DESCRIPTION	FSCM	QTY
18C	1A1H3	1415-0007 GENERIC	LOCKWASHER, 5/16", INT. TOOTH	17794 ZZZ	1
18D	1A1H4	1415-0007 GENERIC	LOCKWASHER, 5/16", INT. TOOTH	17794 ZZZ	1
18E	1A1H5	1415-0007 GENERIC	LOCKWASHER, 5/16", INT. TOOTH	17794 ZZZ	1
19A	1A1H6	1415-0026 GENERIC	WASHER, FLAT, #6, WIDE	17794 ZZZ	3
19B	1A1H7	1415-0026 GENERIC	WASHER, FLAT, #6, WIDE	17794 ZZZ	2
19C	1A1H8	1415-0026 GENERIC	WASHER, FLAT, #6, WIDE	17794 ZZZ	4
20	1A1H9	1415-0027	PLATE, GROUND LOCKING (CHGND)	17794	2
21A	1A1H10	1415-0005 GENERIC	LOCKWASHER, #10, INT. TOOTH	17794 ZZZ	2
21B	1A1H11	1415-0005 GENERIC	LOCKWASHER, #10, INT. TOOTH	17794 ZZZ	2
22A	1A1H12	1415-0017 GENERIC	WASHER, FLAT, #8	17794 ZZZ	4
22B	1A1H13	1415-0017 GENERIC	WASHER, FLAT, #8	17794 ZZZ	4
22C	1A1H14	1415-0017 GENERIC	WASHER, FLAT, #8	17794 ZZZ	4
22D	1A1H15	1415-0017 GENERIC	WASHER, FLAT, #8	17794 ZZZ	8
23A	1A1H16	1410-0020 GENERIC	NUT, HEX, #6-32 W/LOCKWASHER	17794 ZZZ	4
23B	1A1H17	1410-0020 GENERIC	NUT, HEX, #6-32 W/LOCKWASHER	17794 ZZZ	1
23C	1A1H18	1410-0020 GENERIC	NUT, HEX, #6-32 W/LOCKWASHER	17794 ZZZ	2
23D	1A1H19	1410-0020 GENERIC	NUT, HEX, #6-32 W/LOCKWASHER	17794 ZZZ	4

DWG. NO: R7008-0187 REV: A EC NO: 3759 DATE: 3/4/94 APP:

AMENDED P/L FORMAT: 8/23/94

TITLE: POWER SOURCE, PPS 400, 115V REV: B EC NO: 4083 DATE: 08/11/95

INDEX	REFERENCE NO.	PART NO.	DESCRIPTION	FSCM	QTY
24A	1A1H20	1410-0021 GENERIC	NUT, HEX, #8-32 W/LOCKWASHER	17794 ZZZ	4
24B	1A1H21	1410-0021 GENERIC	NUT, HEX, #8-32 W/LOCKWASHER	17794 ZZZ	3
24C	1A1H22	1410-0021 GENERIC	NUT, HEX, #8-32 W/ LOCKWASHER	17794 ZZZ	4
24D	1A1H23	1410-0021 GENERIC	NUT, HEX, #8-32 W/LOCKWASHER	17794 ZZZ	3
24E	1A1H24	1410-0021 GENERIC	NUT, HEX, #8-32 W/LOCKWASHER	17794 ZZZ	4
24F	1A1H25	1410-0021 GENERIC	NUT, HEX, #8-32 W/LOCKWASHER	17794 ZZZ	8
25	1A1H26	1410-0033 GENERIC	NUT, HEX, 5/16-24	17794 ZZZ	1
26A	1A1H27	1410-0019 GENERIC	NUT, HEX, #4-40 W/LOCKWASHER	17794 ZZZ	2
26B	1A1H28	1410-0019 GENERIC	NUT, HEX, #4-40 W/LOCKWASHER	17794 ZZZ	2
26C	1A1H29	1410-0019 GENERIC	NUT, HEX, #4-40 W/LOCKWASHER	17794 ZZZ	2
26D	1A1H30	1410-0019 GENERIC	NUT, HEX,# 4-40 W/LOCKWASHER	17794 ZZZ	4
27A	1A1H31	1349-0045 GENERIC	TY-WRAP	17794 ZZZ	20
27B	1A1H32	1349-0045 GENERIC	TY-WRAP	17794 ZZZ	16
28A	1A1H33	1405-0074 GENERIC	SCREW, BINDER HD., #10-32 X 3/8" LG., SLOTTED	17794 ZZZ	2
28B	1A1H34	1405-0074 GENERIC	SCREW, BINDER HE., #10-32 X 3/8" LG., SLOTTED	17794 ZZZ	2
29	1A1H35	1405-0034 GENERIC	SCREW, BINDER HD, #6-32, X 3/4" LG., SLOTTED	17794 ZZZ	2

DWG. NO: R7008-0187

TITLE: POWER SOURCE, PPS 400, 115V

REV: A EC NO: 3759 DATE: 3/4/94
AMENDED P/L FORMAT: 8/23/94
REV: B EC NO: 4083 DATE: 08/11/95

APP:

INDEX	REFERENCE NO.	PART NO.	DESCRIPTION	FSCM	QTY
30	1A1H36	1349-0254 WIT-18V	TY-WRAP, NYLON, .1" WIDE X 8.0" LG.	17794 06915	1
31	1A1H37	1289-0017 4950	TAPE, FOAM, 20" WIDE (QTY 1 @ 7/8" LG.)	17794 52152	7/8"
32A	1A1H38	1405-0582 GENERIC	SCREW,THRD FORM, PAN HD.,PHIL,REC,#6-32X.38"LG	17794 ZZZ	10
32B	1A1H39	1405-0582 GENERIC	SCREW,THRD FORM, PAN HD.,PHIL,REC,#6-32X.38"LG	17794 ZZZ	13
33A	1A1H40	1405-0635 GENERIC	SCREW, HEX HD., CAP, #8-32 X .38"LG.	17794 ZZZ	3
33B	1A1H41	1405-0635 GENERIC	SCREW, HEX HD., CAP, #8-32 X .38"LG.	17794 ZZZ	4
33C	1A1H42	1405-0635 GENERIC	SCREW, HEX HD., CAP, #8-32 X .38"LG.	17794 ZZZ	8
34A	1A1H43	1405-0398-02 GENERIC	SCREW, PAN HD.,#6-32 X.31"LG, W/LOCKWASHER	17794 ZZZ	4
34B	1A1H44	1405-0398-02 GENERIC	SCREW, PAN HD.,#6-32 X .31" LG, W/LOCKWASHER	17794 ZZZ	4
35A	1A1H45	1410-0033 GENERIC	NUT, HEX, 5/16"-24	17794 ZZZ	1
35B	1A1H46	1410-0033 GENERIC	NUT, HEX, 5/16"-24	17794 ZZZ	1
35C	1A1H47	1410-0033 GENERIC	NUT, HEX, 5/16"-24	17794 ZZZ	1
35D	1A1H48	1410-0033 GENERIC	NUT, HEX, 5/16"-24	17794 ZZZ	1
36	1A1H49	1415-0069	WASHER, FLAT,. .170 ID X .313 OD	17794	3
37	1A1H50	1415-0058 GENERIC	WASHER, #10, PLAIN	17794 ZZZ	3
38	1A1H51	1415-0006 GENERIC	LOCKWASHER, 1/4", INT. TOOTH	17794 ZZZ	1
39	1A1H52		ITEM DELETED PER EC 4083, REV B		

DWG. NO: R7008-0187

REV: A EC NO: 3759 DATE: 3/4/94 APP:

AMENDED P/L FORMAT: 8/23/94

TITLE: POWER SOURCE, PPS 400, 115V

REV: B EC NO: 4083 DATE: 08/11/95

INDEX	REFERENCE NO.	PART NO.	DESCRIPTION	FSCM	QTY
40A	1A1J40	1207-0270	RECEPTACLE ASSY (J40)	17794	1
40B	1A1J41	1207-0270	RECEPTACLE ASSY (J41)	17794	1
40C	1A1J42	1207-0270	RECEPTACLE ASSY (J42)	17794	1
40D	1A1J43	1207-0270	RECEPTACLE ASSY (J43)	17794	1
41	1A1J44	1207-0151	RECEPTACLE, AC FUSED (J44)	17794	1
		PF0011/15/48		0GV90	
		4300.1017		61935	
		723-15/48		0ACZ1	
42	1A1J46	1205-0045	POST, BINDING,INSULATED, BLACK D (J46)	17794	1
43	1A1J47	1205-0045	POST, BINDING, INSULATED, BLACK D(J47)	17794	1
44	1A1J49	1207-0042	BANANA JACK, RED (J49)	17794	1
		108-0902-001		74970	
45	1A1J50	1207-0043	BANANA JACK, BLACK (J50)	17794	1
		108-0903-001		74970	
46	1A1J52	1207-0270	RECEPTACLE ASSY.(J52)	17794	1
47	1A1J53	1207-0043	BANANA JACK, BLACK (J53)	17794	1
		108-0903-001		74970	
48	1A1J56	1207-0200	BANANA JACK W/LUG, UNINSULATED (J56)	17794	1
		APN116197		40970	
49A	1A1J57	1207-0270	RECEPTACLE ASSY.(J57)	17794	1
49B	1A1J58	1207-0270	RECEPTACLE ASSY.(J58)	17794	1
49C	1A1J59	1207-0270	RECEPTACLE ASSY.(J59)	17794	1
50	1A1L1	1194-0019	SOLENOID, 12V GW (S1)	17794	1
51	1A1MP1	1140-0034	RESERVOIR, PRESSURE	17794	1
52	1A1MP2	1315-0139	CHASSIS, PPS 400	17794	1
53A	1A1MP3	1259-0085	MOUNT, PANEL, FEMALE,QUICK CHANGE	17794	1
53B	1A1MP4	1259-0085	MOUNT, PANEL, FEMALE QUICK CHANGE	17794	1
53C	1A1MP5	1259-0085	MOUNT, PANEL, FEMALE QUICK CHANGE	17794	1
53D	1A1MP6	1259-0085	MOUNT, PANEL, FEMALE QUICK CHANGE	17794	1
54A	1A1MP7	1259-0090	FITTING, PIPE, MALE, 1/8"-27 NPT, 1/8" HOSE	17794	1
		5030494		06034	
54B	1A1MP8	1259-0090	FITTING, PIPE, MALE, 1/8"-27 NPT, 1/8" HOSE	17794	1
		5030494		06034	

DWG. NO: R7008-0187 REV: A EC NO: 3759 DATE: 3/4/94 APP:

AMENDED P/L FORMAT: 8/23/94

TITLE: POWER SOURCE, PPS 400, 115V REV: B EC NO: 4083 DATE: 08/11/95

INDEX	REFERENCE NO.	PART NO.	DESCRIPTION	FSCM	QTY
55A	1A1MP9	1321-0235 942A734ABP012 4586-48	BRACKET, CAPACITOR MOUNT, 1 3/8" DIA.	17794 6AX52 ZZZ	1
55B	1A1MP10	1321-0235 942A734ABP012 4586-48	BRACKET, CAPACITOR MOUNT, 1 3/8" DIA.	17794 6AX52 ZZZ	1
55C	1A1MP11	1321-0235 942A734ABP012 4586-48	BRACKET, CAPACITOR MOUNT, 1 3/8" DIA.	17794 6AX52 ZZZ	1
56A	1A1MP12	1215-0137	STANDOFF, 1/4" HEX, #6-32 X 5 3/8" LG.	17794	4
56B	1A1MP13	1215-0137	STANDOFF, 1/4" HEX, #6-32 X 5 3/8" LG	17794	4
57A	1A1MP14	1215-0097	BUSHING, .156 ID X .281 OD X .330 LG.	17794	4
57B	1A1MP15	1215-0097	BUSHING, .156 ID X .281 OD X .330 LG.	17794	2
57C	1A1MP16	1215-0097	BUSHING, .156 ID X .281 OD X .330 LG	17794	4
58A	1A1MP17	1349-0239 G-404-1	GROMMET, MOTOR MOUNT	17794 63994	4
58B	1A1MP18	1349-0239 G-404-1	GROMMET, MOTOR MOUNT	17794 63994	3
58C	1A1MP19	1349-0239 G-404-1	GROMMET, MOTOR MOUNT	17794 63994	4
59A	1A1MP20	1309-0020	VISIFILTER	17794	1
59B	1A1MP21	1309-0020	VISIFILTER	17794	1
60A	1A1MP22	1342-0020-06 C2801023	TUBING, SILICONE, .187 ID, BLACK, 3" LG.	17794 06034	1
60B	1A1MP23	1342-0020-06 C2801023	TUBING, SILICONE, .187 ID, BLACK, 3" LG.	17794 06034	1
61	1A1MP24	1342-0020-07 C2801023	TUBING, SILICONE, .187 ID, BLACK, 3.5" LG.	17794 06034	1
62	1A1MP25	1342-0020-09 C2801023	TUBING, SILICONE, .187 ID, BLACK, 14" LG.	17794 06034	1
63	1A1MP26	1342-0020-05 C2801023	TUBING, SILICONE, .187 ID, BLACK, 8" LG.	17794 06034	1
64	1A1MP27	1342-0020-08 C2801023	TUBING, SILICONE, .187 ID, BLACK, 12" LG.	17794 06034	1

DWG. NO: R7008-0187

REV: A EC NO: 3759 DATE: 3/4/94 APP:

AMENDED P/L FORMAT: 8/23/94

TITLE: POWER SOURCE, PPS 400, 115V

REV: B EC NO: 4083 DATE: 08/11/95

INDEX	REFERENCE NO.	PART NO.	DESCRIPTION	FSCM	QTY
65	1A1MP28	1342-0015-03 MS 70E00B	TUBING, SILICONE, .125 ID X .25 OD, BLACK, 8" LG.	17794 ZZZ	1
66	1A1MP29	1342-0015-04 MS 70E00B	TUBING, SILICONE, .125 ID X .25 OD, BLACK, 10.5"LG.	17794 ZZZ	1
67	1A1MP30	1342-0015-05 MS 70E00B	TUBING, SILICONE, .125 ID X .25 OD, BLACK, 9" LG.	17794 ZZZ	1
68A	1A1MP31	1211-0054 5324K51	CLAMP, HOSE, SELF TIGHTENING, .250 OD	17794 3A054	2
68B	1A1MP32	1211-0054 5324K51	CLAMP, HOSE, SELF TIGHTENING, .250 OD	17794 3A054	2
68C	1A1MP33	1211-0054 5324K51	CLAMP, HOSE, SELF TIGHTENING, .250 OD	17794 3A054	1
69A	1A1MP34	1274-0034 ABMM	MOUNT, ADHESIVE BACKED	17794 06383	1
69B	1A1MP35	1274-0034 ABMM	MOUNT, ADHESIVE BACKED	17794 06383	1
69C	1A1MP36	1274-0034 ABMM	MOUNT, ADHESIVE BACKED	17794 06383	2
70	1A1MP37	1351-0271	LABEL, GROUND SYMBOL	17794	1
71	1A1MP38	1360-0080	PANEL, REAR, PPS 400	17794	1
72	1A1MP39	1335-0152	PLATE, STIFFENER, PPS 400	17794	1
73	1A1MP40	2320-0049	CASE, EXTRUSION	17794	1
74	1A1MP41	1351-0534	LABEL, IDENT., PPS 400, 115V	17794	1
75	1A1MP42	1274-0021 SJ-5023	BUMPON, LARGE	17794 1N879	4
76	1A1MP43	1222-0081	KNOB, PRESSURE	17794	1
77	1A1MP44	1360-0079	PANEL, FRONT, PPS 400	17794	1
78A	1A1MP45	1222-0089 1R03K106A4G002	KNOB, CONTROL	17794 86797	1
78B	1A1MP46	1222-0089 1R03K106A4G002	KNOB, CONTROL	17794 86797	1
78C	1A1MP47	1222-0089 1R03K106A4G002	KNOB, CONTROL	17794 86797	1

DWG. NO: R7008-0187 REV: A EC NO: 3759 DATE: 3/4/94 APP:
AMENDED P/L FORMAT: 8/23/94

TITLE: POWER SOURCE, PPS 400, 115V REV: B EC NO: 4083 DATE: 08/11/95

INDEX	REFERENCE NO.	PART NO.	DESCRIPTION	FSCM	QTY
78D	1A1MP48	1222-0089 1R03K106A4G002	KNOB, CONTROL	17794 86797	1
78E	1A1MP49	1222-0089 1R03K106A4G002	KNOB, CONTROL	17794 86797	1
79A	1A1MP50	1349-0241 RTC-51	BUSHING, LED PANEL MTG	17794 ZZZ	1
79B	1A1MP51	1349-0241 RTC-51	BUSHING, LED PANEL MTG	17794 ZZZ	1
79C	1A1MP52	1349-0241 RTC-51	BUSHING, LED PANEL MTG	17794 ZZZ	1
79D	1A1MP53	1349-0241 RTC-51	BUSHING, LED PANEL MTG	17794 ZZZ	1
79E	1A1MP54	1349-0241 RTC-51	BUSHING, LED PANEL MTG	17794 ZZZ	1
80	1A1MP55	1316-0012	BEZEL	17794	1
81	1A1MP56	1215-0138 N-1401-140-0	SPACER, .140 ID, .375 OD, .188 THK	17794 0GCW4	4
82	1A1MP57	1346-0021 FIT 221-3/32"	TUBING, SHRINK, 3/32", BLACK (18 PCS @ 1/2" LG. EA.)	17794 92194	9"
83	1A1MP58	1346-0010 FIT 221-1/8"	TUBING, SHRINK, 1/8", BLACK (6 PCS @ 1/2" LG. EACH)	17794 92194	3"
84A	1A1POT1	1179-0133 31CN401	POTENTIOMETER, 10 KOHM, 1/4W, 20% (POT1)	17794 1JN02	1
84B	1A1POT2	1179-0133 31CN401	POTENTIOMETER, 10 KOHM, 1/4W, 20% (POT2)	17794 1JN02	1
84C	1A1POT3	1179-0133 31CN401	POTENTIOMETER, 10 KOHM, 1/4W, 20% (POT3)	17794 1JN02	1
85	1A1POT4	1179-0204 T16VE6.35L20 1MB 10%	POTENTIOMETER, 1 MOHM, .1W, 10% (POT4)	17794 54869	1
86A	1A1R1	1179-0194 RSF1B330ohm5%T MO-1-330-5%	RESISTOR, 330 OHM, 1W, 5% (R1)	17794 56637 11502	1

DWG. NO: R7008-0187

TITLE: POWER SOURCE, PPS 400, 115V

REV: A EC NO: 3759 DATE: 3/4/94

AMENDED P/L FORMAT: 8/23/94

REV: B EC NO: 4083 DATE: 08/11/95

APP:

INDEX	REFERENCE NO.	PART NO.	DESCRIPTION	FSCM	QTY
86B	1A1R2	1179-0194 RSF1B330ohm5%T MO-1-330-5%	RESISTOR, 330 OHM, 1W, 5%(R2)	17794 56637 11502	1
87A	1A1R3	1179-0114 995-3A-4330 VC3D SERIES 3 1/4W, 1ohm	RESISTOR, 1 OHM, 3 1/4W, 5% (R3)	17794 44655 12697	1
87B	1A1R4	1179-0114 995-3A-4330 VC3D SERIES 3 1/4W, 1ohm	RESISTOR, 1 OHM, 3 1/4W, 5%(R4)	17794 44655 12697	1
88A	1A1SW1	1157-0052 6-221-5-919-0-9-V	SWITCH, MINIATURE, W/HIGH BARRIER (SW1)	17794 73559	1
88B	1A1SW3	1157-0052 6-221-5-919-0-9-V	SWITCH, MINIATURE, W/HIGH BARRIER (SW3)	17794 73559	1
89	1A1SW2	1157-0070 73-9328	SWITCH, ROTARY,4 POS.,DOUBLE POLE,30 DEG.(SW2)	17794 79692	1
90	1A1SW4	1157-0067 6-21-1-5-929-00-N	SWITCH, HIGH/LOW (SW4)	17794 73559	1
91	1A1T1	1192-0071	TRANSFORMER, 115V/21V 19A (T1)	17794	1
92	1A1T2	1192-0072	TRANSFORMER, 115V/2.3V 50A (T2)	17794	1
93	1A1W1	3008-0056	WIRE HARNESS, CHASSIS, PPS 400	17794	1
94	1A1W2	3008-0057	WIRING HARNESS, FT. PANEL, PPS 400	17794	1
95	1A1W3	3008-0063	HARNESS, JUMPER	17794	1
96	1A1XF2	1161-0012	FUSEHOLDER, QC, (1/4" X 1 1/4" FUSE)	17794	1

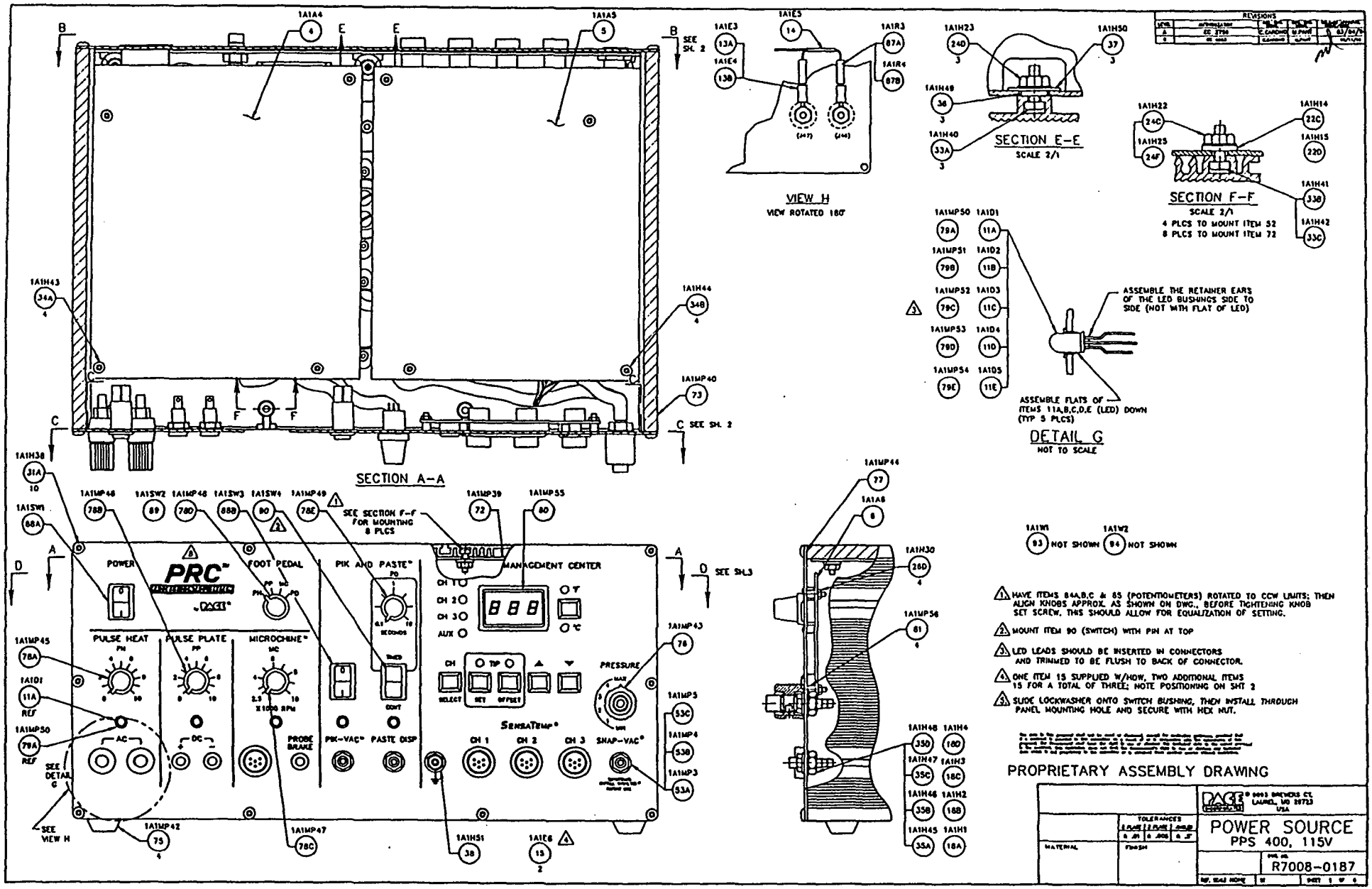
SECTION A–A
VIEW H
VIEW ROTATED 180°
SECTION E–E
SCALE 2/1
SECTION F–F
SCALE 2/1
4 PLCS TO MOUNT ITEM 52
8 PLCS TO MOUNT ITEM 72
DETAIL G
NOT TO SCALE
ASSEMBLE THE RETAINER EARS OF THE LED BUSHINGS SIDE TO SIDE (NOT WITH FLAT OF LED)
ASSEMBLE FLATS OF ITEMS 11A,B,C,D,E (LED) DOWN (TYP 5 PLCS)
SEE SECTION F–F FOR MOUNTING 8 PLCS
POWER
PRC
FOOT PEDAL
PIK AND PASTE
MANAGEMENT CENTER
PULSE HEAT
PULSE PLATE
MICROCHINE
PRESSURE
SENSATEMP
PROBE BRAKE
PIK-VAC
PASTE DISP
SNAP-VAC
SEE DETAIL G
SEE VIEW H
SEE SHL 2
SEE SHL3
NOT SHOWN
1. HAVE ITEMS 84A,B,C & 85 (POTENTIOMETERS) ROTATED TO CCW LIMITS; THEN ALIGN KNOBS APPROX. AS SHOWN ON DWG., BEFORE TIGHTENING KNOB SET SCREW. THIS SHOULD ALLOW FOR EQUALIZATION OF SETTING.
2. MOUNT ITEM 90 (SWITCH) WITH PIN AT TOP
3. LED LEADS SHOULD BE INSERTED IN CONNECTORS AND TRIMMED TO BE FLUSH TO BACK OF CONNECTOR.
4. ONE ITEM 15 SUPPLIED W/HOW, TWO ADDITIONAL ITEMS 15 FOR A TOTAL OF THREE; NOTE POSITIONING ON SHT 2
5. SLIDE LOCKWASHER ONTO SWITCH BUSHING, THEN INSTALL THROUGH PANEL MOUNTING HOLE AND SECURE WITH HEX NUT.
PROPRIETARY ASSEMBLY DRAWING
POWER SOURCE
PPS 400, 115V
R7008-0187

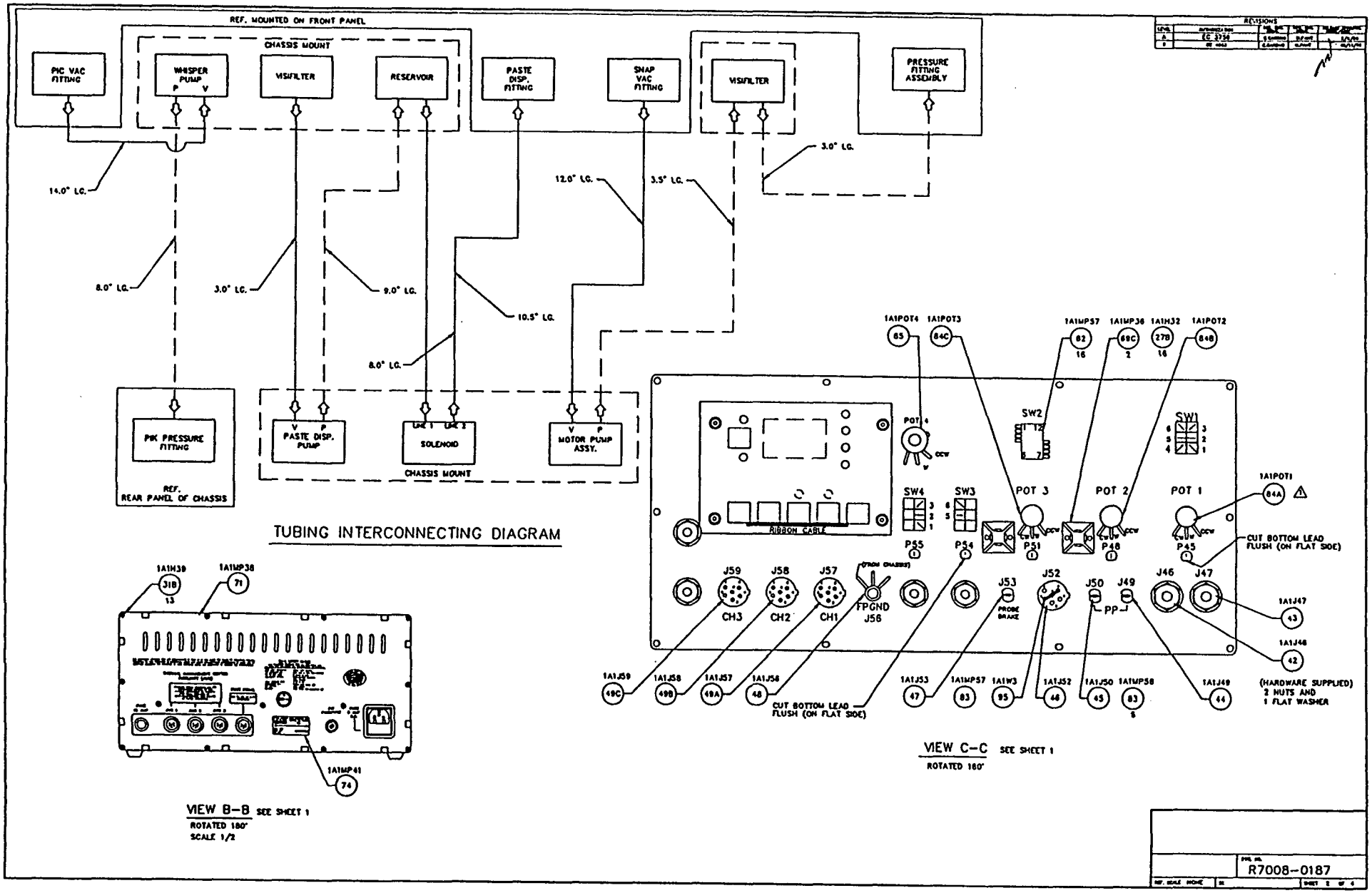
REF. MOUNTED ON FRONT PANEL
CHASSIS MOUNT
PIC VAC FITTING
WHISPER PUMP
P V
VISIFILTER
RESERVOIR
PASTE DISP. FITTING
SNAP VAC FITTING
VISIFILTER
PRESSURE FITTING ASSEMBLY
14.0" LG.
8.0" LG.
3.0" LG.
9.0" LG.
10.5" LG.
8.0" LG.
12.0" LG.
3.5" LG.
3.0" LG.
PIK PRESSURE FITTING
REF. REAR PANEL OF CHASSIS
PASTE DISP. PUMP
SOLENOID
MOTOR PUMP ASSY.
CHASSIS MOUNT
TUBING INTERCONNECTING DIAGRAM
1A1H39
1A1MP38
1A1MP41
VIEW B-B SEE SHEET 1
ROTATED 180°
SCALE 1/2
1A1POT4
1A1POT3
1A1MP57
1A1MP36
1A1H32
1A1POT2
1A1POT1
POT 4
POT 3
POT 2
POT 1
SW2
SW1
SW4
SW3
RIBBON CABLE
P55
P54
P51
P48
P45
J59
J58
J57
J56
J53
J52
J50
J49
J46
J47
CH3
CH2
CH1
FPGND
PROBE BRAKE
PP
CUT BOTTOM LEAD FLUSH (ON FLAT SIDE)
(HARDWARE SUPPLIED) 2 NUTS AND 1 FLAT WASHER
1A1J59
1A1J58
1A1J57
1A1J56
1A1J53
1A1MP57
1A1W3
1A1J52
1A1J50
1A1MP58
1A1J49
1A1J47
1A1J48
VIEW C-C SEE SHEET 1
ROTATED 180°
REVISIONS
R7008-0187

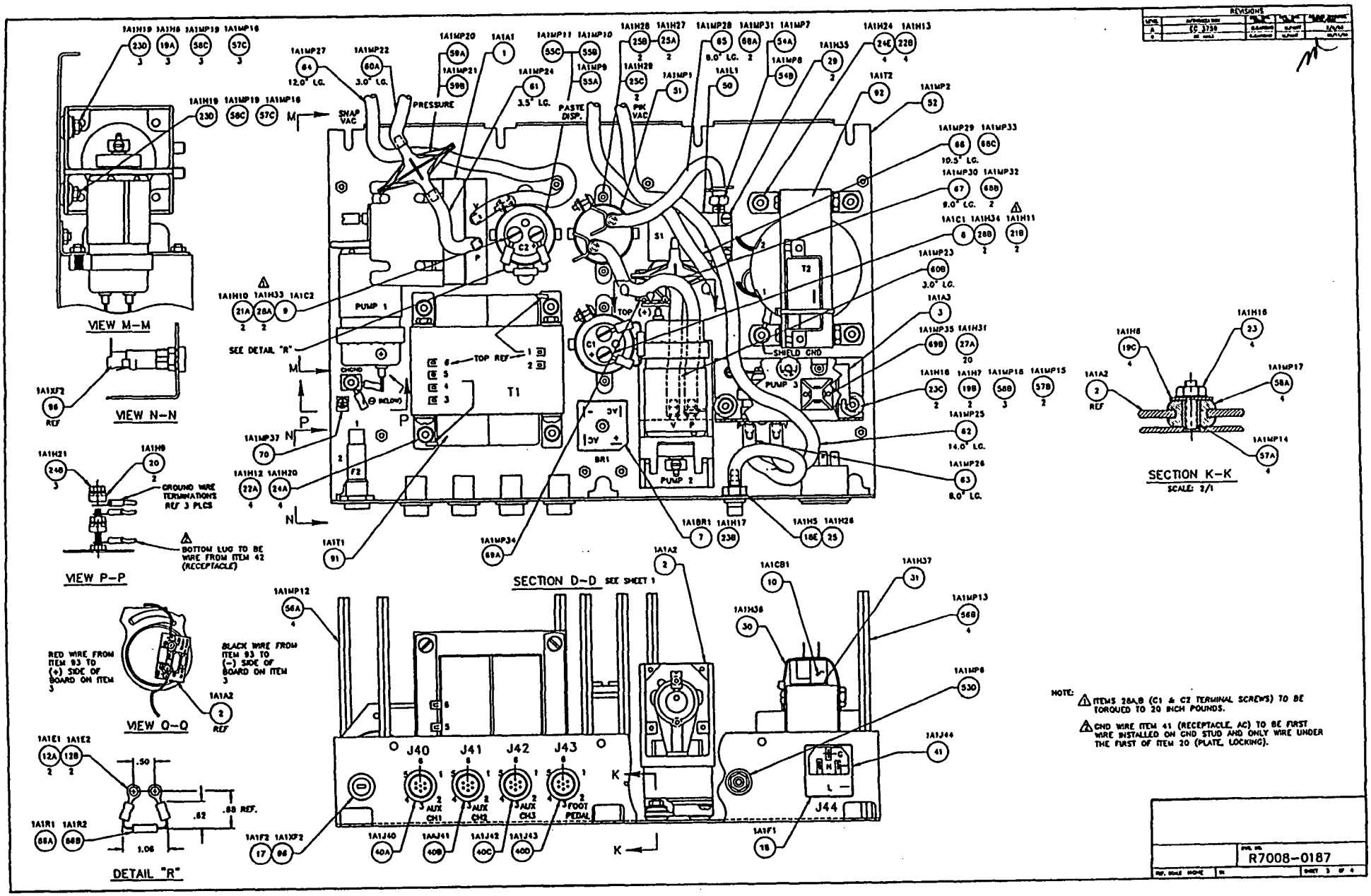
VIEW M-M
VIEW N-N
VIEW P-P
VIEW Q-Q
DETAIL "R"
SECTION D-D SEE SHEET 1
SECTION K-K
SCALE: 2/1
SEE DETAIL "R"
PUMP 1
PUMP 2
PUMP 3
T1
T2
S1
C1
C2
BR1
F2
SHIELD GND
TOP REF
PRESSURE
PASTE DISP.
PK VAC
SNAP VAC
GROUND WIRE TERMINATIONS REF 3 PLCS
BOTTOM LUG TO BE WIRE FROM ITEM 42 (RECEPTACLE)
RED WIRE FROM ITEM 93 TO (+) SIDE OF BOARD ON ITEM 3
BLACK WIRE FROM ITEM 93 TO (-) SIDE OF BOARD ON ITEM 3
J40
J41
J42
J43
J44
AUX CH1
AUX CH2
AUX CH3
FOOT PEDAL
NOTE:
ITEMS 28A,B (C1 & C2 TERMINAL SCREWS) TO BE TORQUED TO 20 INCH POUNDS.
CND WIRE ITEM 41 (RECEPTACLE, AC) TO BE FIRST WIRE INSTALLED ON GND STUD AND ONLY WIRE UNDER THE FIRST OF ITEM 20 (PLATE, LOCKING).
R7008-0187

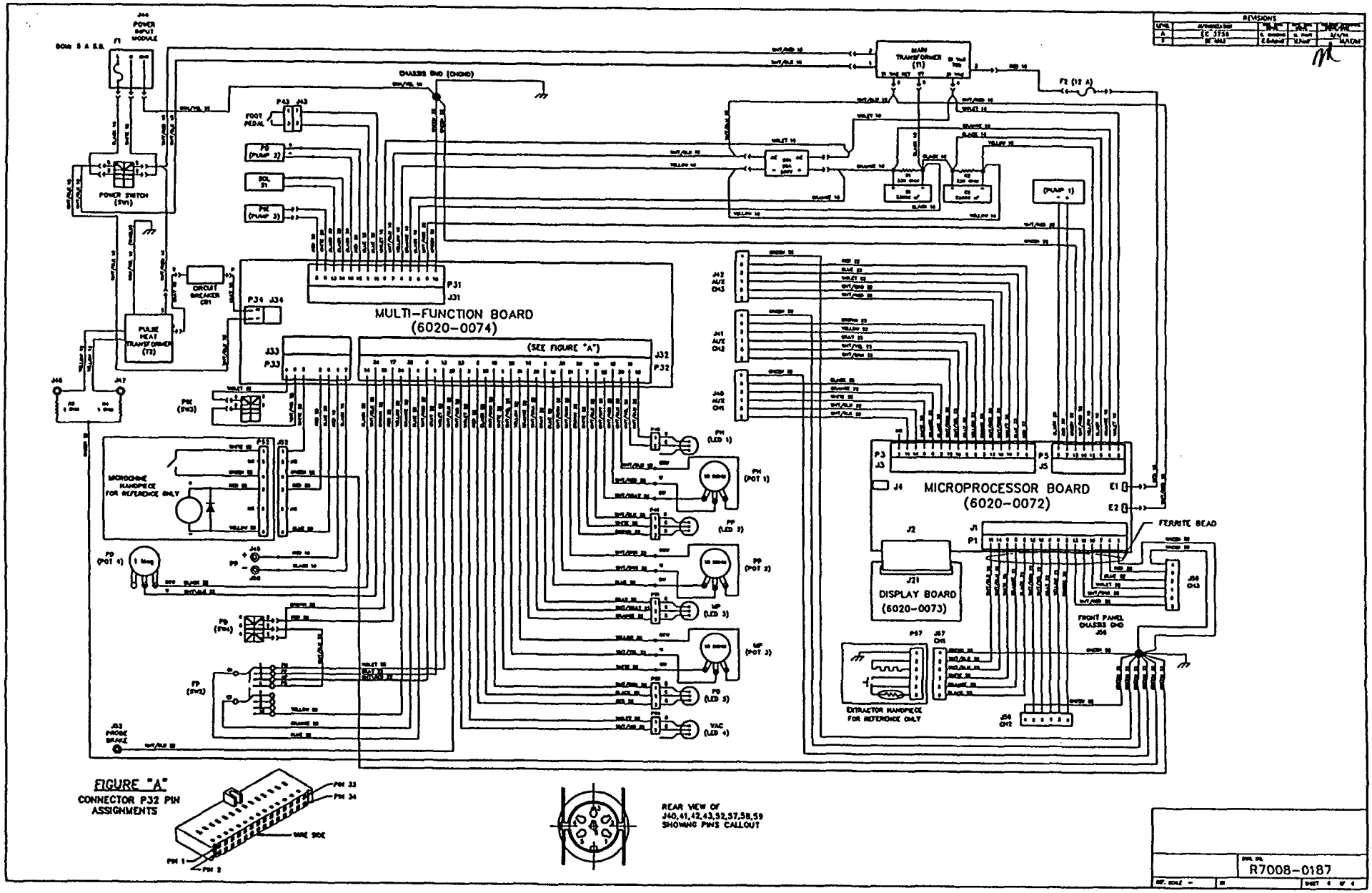
REVISIONS
POWER INPUT MODULE
MAIN TRANSFORMER (T1)
CHASSIS GND (CHGND)
FOOT PEDAL
POWER SWITCH (SW1)
CIRCUIT BREAKER CB1
PULSE HEAT TRANSFORMER (T2)
MULTI-FUNCTION BOARD
(6020-0074)
(SEE FIGURE "A")
MICROPROCESSOR BOARD
(6020-0072)
DISPLAY BOARD
(6020-0073)
FERRITE BEAD
FRONT PANEL CHASSIS GND
EXTRACTOR HANDPIECE FOR REFERENCE ONLY
MICROCHIME HANDPIECE FOR REFERENCE ONLY
PHONE BRAKE
FIGURE "A"
CONNECTOR P32 PIN ASSIGNMENTS
REAR VIEW OF J40,41,42,43,52,57,58,59 SHOWING PINS CALLOUT
R7008-0187

PACE INCORPORATED

PROPRIETARY PARTS LIST

The data in this proposal shall not be used or disclosed, except for evaluation purposes, provided that if a contract is awarded to this submitter as a result of or in connection with the submission of this proposal, the Government shall have the right to use or disclose this technical data to the extent provided in the contract. This restriction does not limit the Government's right to use or disclose any technical data which is not proprietary to the submitter or is obtained from another source without restriction.

DWG. NO: R1336-0028 REV: A EC NO: 3759 DATE: 3/4/94 APP:

AMENDED P/L FORMAT: 8/23/94

TITLE: MOTOR PUMP ASSY

INDEX	REFERENCE NO.	PART NO.	DESCRIPTION	FSCM	QTY
REF	1A1A1	1336-0028	MOTOR PUMP ASSY (PUMP 1)	17794	REF

DWG NO. B R1336-0028 | A

REVISIONS				
LEVEL	AUTHORIZATION	DES. ENG. INITIAL	MFG. ENG. INITIAL	RELEASE APPROVAL INITIAL/DATE
A	EC 3759	C. CARDNO	M. PANT	3/4/9

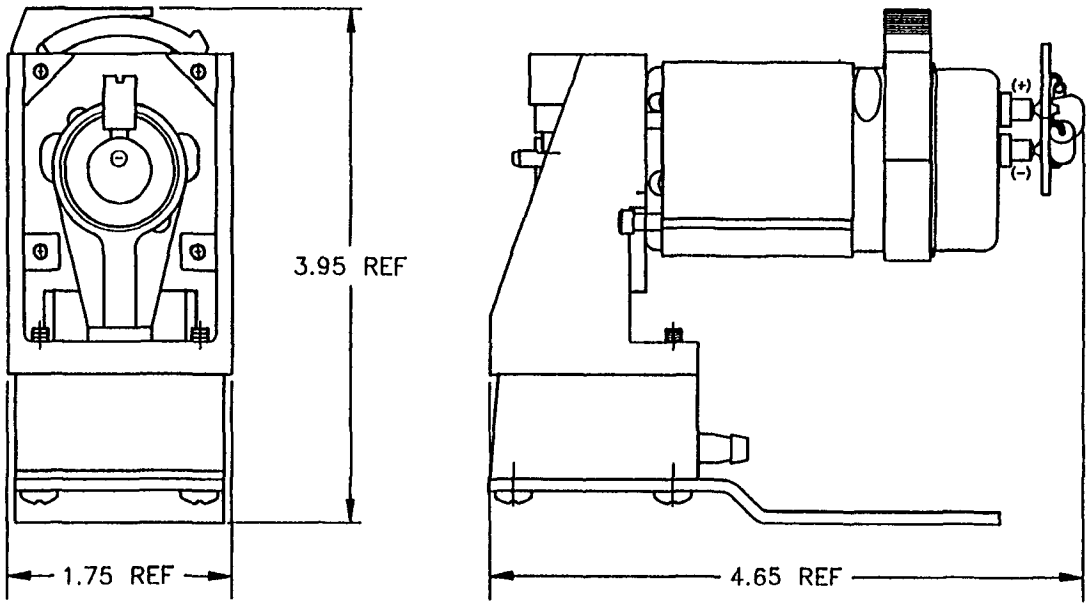

The data in this proposal shall not be used or disclosed, except for evaluation purposes, provided that if a contract is awarded to this submitter as a result of or in connection with the submission of this proposal, the Government shall have the right to use or disclose this technical data to the extent provided in the contract. This restriction does not limit the Government's right to use or disclose any technical data which is not proprietary to the submitter or is obtained from another source without restriction.

PROPRIETARY SOURCE CONTROL DRAWING

THIS DRAWING CONTAINS INFORMATION PROPRIETARY TO PACE INC.. ANY REPRODUCTION, DISCLOSURE OR USE OF THIS DRAWING IS EXPRESSLY PROHIBITED EXCEPT AS PACE INC. MAY OTHERWISE AGREE IN WRITING.

UNLESS OTHERWISE SPECIFIED DIMENSIONS ARE IN INCHES. DO NOT SCALE.

TOLERANCES		
2 PLACE	3 PLACE	ANGLES
± .01	± .005	± .5°

MATERIAL: –

FINISH: –

PACE®
PACE, Incorporated
9893 Brewers Court
Laurel, MD 20723, U.S.A.
TEL (301) 490-9660 FAX (301) 604-2160
Systems for Development, Production, and Repair of Electronic Assemblies

MOTOR PUMP ASSEMBLY PPS 400

F.S.C.M. NO.	DWG. NO.
17794	R1336–0028

REF. SCALE 1/1 | SK – | SHEET 1 OF 1

1A1A1 1336-0028

CAD 1 INC. 301-565-3340 567825

PACE® INCORPORATED

PROPRIETARY PARTS LIST

The data in this proposal shall not be used or disclosed, except for evaluation purposes, provided that if a contract is awarded to this submitter as a result of or in connection with the submission of this proposal, the Government shall have the right to use or disclose this technical data to the extent provided in the contract. This restriction does not limit the Government's right to use or disclose any technical data which is not proprietary to the submitter or is obtained from another source without restriction.

DWG. NO: R1336-0027 REV: A EC NO: 3759 DATE: 3/4/94 APP:

AMENDED P/L FORMAT: 8/23/94

TITLE: MICROPUMP ASSY, PPS 400

INDEX	REFERENCE NO.	PART NO.	DESCRIPTION	FSCM	QTY
REF	1A1A2	1336-0027	MICROPUMP ASSY, PPS 400 (PUMP 2)	17794	REF

DWG NO. B R1336-0027 A

REVISIONS				
LEVEL	AUTHORIZATION	DES. ENG. INITIAL	MFG. ENG. INITIAL	RELEASE APPROVAL INITIAL/DATE
A	EC 3759	C. CARDNO	M. PANT	3/4/94

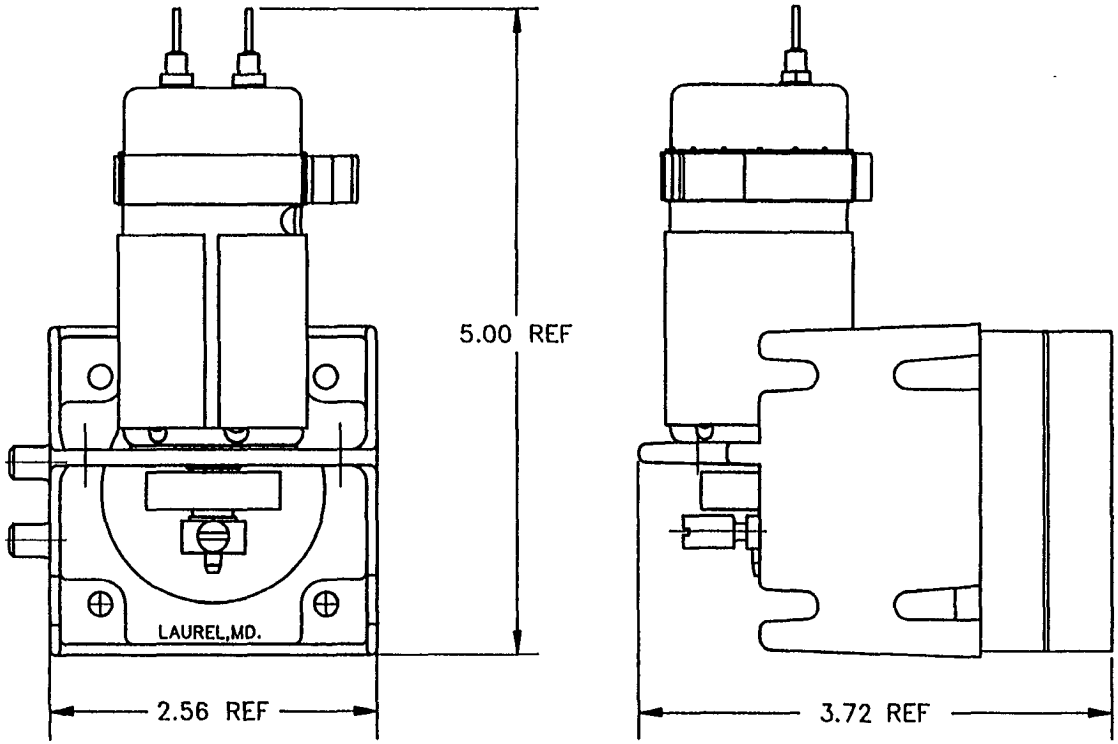

The data in this proposal shall not be used or disclosed, except for evaluation purposes, provided that if a contract is awarded to this submitter as a result of or in connection with the submission of this proposal, the Government shall have the right to use or disclose this technical data to the extent provided in the contract. This restriction does not limit the Government's right to use or disclose any technical data which is not proprietary to the submitter or is obtained from another source without restriction.

PROPRIETARY SOURCE CONTROL DRAWING

THIS DRAWING CONTAINS INFORMATION PROPRIETARY TO PACE INC.. ANY REPRODUCTION, DISCLOSURE OR USE OF THIS DRAWING IS EXPRESSLY PROHIBITED EXCEPT AS PACE INC. MAY OTHERWISE AGREE IN WRITING.

PACE®
PACE, Incorporated
9893 Brewers Court
Laurel, MD 20723, U.S.A.
TEL (301) 490-9660 FAX (301) 604-2180
Systems for Development, Production, and Repair of Electronic Assemblies

UNLESS OTHERWISE SPECIFIED DIMENSIONS ARE IN INCHES. DO NOT SCALE.

TOLERANCES		
2 PLACE	3 PLACE	ANGLES
± .01	± .005	± .5°

MATERIAL: –

FINISH: –

MICROPUMP ASSEMBLY PPS 400

F.S.C.M. NO.	DWG. NO.
17794	R1336–0027

REF. SCALE 1/1 | SK – | SHEET 1 OF 1

1A1A2 1336-0027

CAD 1 INC. 301-585-3340 567825

PACE® INCORPORATED

PROPRIETARY PARTS LIST

The data in this proposal shall not be used or disclosed, except for evaluation purposes, provided that if a contract is awarded to this submitter as a result of or in connection with the submission of this proposal, the Government shall have the right to use or disclose this technical data to the extent provided in the contract. This restriction does not limit the Government's right to use or disclose any technical data which is not proprietary to the submitter or is obtained from another source without restriction.

DWG. NO: R1338-0072 REV: A EC NO: 3759 DATE: 3/4/94 APP:

AMENDED P/L FORMAT: 8/23/94

TITLE: PUMP ASSY, LOW PRESSURE, 21V

INDEX	REFERENCE NO.	PART NO.	DESCRIPTION	FSCM	QTY
REF	1A1A3	1338-0072	PUMP ASSY, LOW PRESSURE, 21V (PUMP 3)	17794	REF

DWG NO.
B

REVISIONS				
LEVEL	AUTHORIZATION	DES. ENG. INITIAL	MFG. ENG. INITIAL	RELEASE APPROVAL INITIAL/DATE
A	EC 3759	C. CARDNO	M. PANT	3/4/94

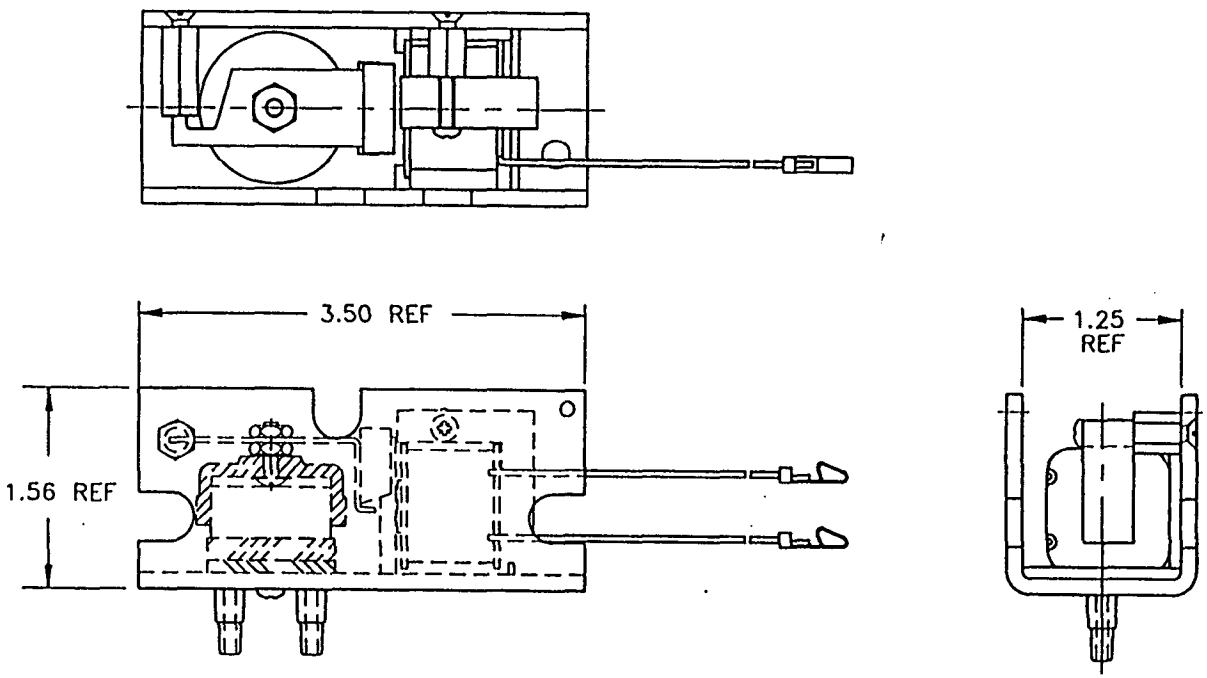

The data in this proposal shall not be used or disclosed, except for evaluation purposes, provided that if a contract is awarded to this submitter as a result of or in connection with the submission of this proposal, the Government shall have the right to use or disclose this technical data to the extent provided in the contract. This restriction does not limit the Government's right to use or disclose any technical data which is not proprietary to the submitter or is obtained from another source without restriction.

PROPRIETARY SOURCE CONTROL DRAWING

THIS DRAWING CONTAINS INFORMATION PROPRIETARY TO PACE INC.. ANY REPRODUCTION, DISCLOSURE OR USE OF THIS DRAWING IS EXPRESSLY PROHIBITED EXCEPT AS PACE INC. MAY OTHERWISE AGREE IN WRITING.

PACE
© PACE, Incorporated
9002 Brewers Court
Laurel, MD 20723, U.S.A.
TEL (301) 490 9660 FAX (301) 604-2160
Systems for Development, Production, and Repair of Electronic Assemblies

UNLESS OTHERWISE SPECIFIED DIMENSIONS ARE IN INCHES. DO NOT SCALE.

TOLERANCES		
2 PLACE	3 PLACE	ANGLES
± .01	± .005	± .5°

MATERIAL
–

FINISH
–

PUMP ASSEMBLY
LOW PRESSURE, 21V

F.S.C.M. NO.	DWG. NO.
17794	R1338–0072

REF. SCALE 1/1 | SK – | SHEET 1 OF 1

1A1A3 1338-0072

CAD 1 INC. 301-385-3360 567825

PAGE® INCORPORATED

PROPRIETARY PARTS LIST

The data in this proposal shall not be used or disclosed, except for evaluation purposes, provided that if a contract is awarded to this submitter as a result of or in connection with the submission of this proposal, the Government shall have the right to use or disclose this technical data to the extent provided in the contract. This restriction does not limit the Government's right to use or disclose any technical data which is not proprietary to the submitter or is obtained from another source without restriction.

DWG. NO: R6020-0074 REV: C EC NO: 4398 DATE: 09/08/95 APP:

TITLE: PCB, MULTIFUNCTION, PPS 400

INDEX	REFERENCE NO.	PART NO.	DESCRIPTION	FSCM	QTY
REF	1A1A4	6020-0074	PCB, MULTIFUNCTION, PPS 400	17794	REF
1	1A1A4C1,C3,C6,C8,C21	1181-0083	CAPACITOR,0.01uF,50V,CER(C1,C3,C6,C8,C21)	17794	5
		923CZ5U103M050B		56289	
		P103M26Z5UFVPWA		59821	
2	1A1A4C2,C24,C53	1181-0102	CAPACITOR,100pF,200V,CER(C2,C24,C53)	17794	3
		C052C101K2G5CA		31433	
3	1A1A4C4	1181-0127	CAPACITOR,0.068uF,63V,FILM,5%(C4)	17794	1
		MKT1817368014R		4U402	
		NMBM683J100TR		0EHX1	
4	1A1A4C5,C37,C38	1181-0113	CAPACITOR,.1uF,100V,FILM(C5,C37,C38)	17794	3
		712A1XC104PJ101SG		59821	
		MKS 2 0.1 uf 100V 5%		68919	
5	1A1A4C7,C10-C12,C14-C18,C20, C25,C28,C30-C36,C39,C42,C45, C46,C49	1181-0060	CAPACITOR,0.1uF,50V,CER(C7,C10-C12,C14-C18,C20, C25,C28,C30-C36,C39,C42,C45,C46,C49)	17794	24
		923CZ5U103M050B		56289	
		P103M26Z5UFVPWA		59821	
6	1A1A4C9	1181-0104	CAPACITOR,1.0uF,50V,CER(C9)	17794	1
		CK06BX105K		31433	
7	1A1A4C13	1181-0040	CAPACITOR,4.7uF,35v,TANT(C13)	17794	1
		199D475X9035CA1		56289	
8	1A1A4C19	1181-0128	CAPACITOR,0.22uF,50V,CER(C19)	17794	1
		A224M18Z5UFVVWT		59821	
		SL105E224MAA		51406	
9	1A1A4C22	1181-0122	CAPACITOR,0.022uF,50V,CER(C22)	17794	1
		A223K17X7RFVVWE		59821	
		SL105C223KAA		51406	

DWG. NO: R6020-0074 REV: C EC NO: 4398 DATE: 09/08/95 APP:

TITLE: PCB, MULTIFUNCTION, PPS 400

INDEX	REFERENCE NO.	PART NO.	DESCRIPTION	FSCM	QTY
10	1A1A4C23	1181-0103 T350A105K035AS	CAPACITOR,1uF,35v,TANT(C23)	17794 31433	1
11	1A1A4C26,C41,C43,C44	1181-0093 TAP106M035S T350G106M035AS	CAPACITOR,10uF,35V,TANT.(C26,C41,C43,C44)	17794 04222 31433	4
12	1A1A4C27,C40	1181-0114 C317C102M1R5CA K102M15X7RFTTWA	CAPACITOR,.001uF,50V,CER(C27,C40)	17794 31433 59821	2
13	1A1A4C29,C52	1181-0118 MKT1817310015R NMBM103K100TB	CAPACITOR,0.01uF,100V,FILM(C29,C52)	17794 4U402 0EHX1	2
14	1A1A4C47	1181-0121 106TTA050M NAE10M50V6X13TR	CAPACITOR,10uF,50V,AL EL (C47)	17794 74840 0EHX1	1
15	1A1A4C48	1181-0124 SA101C561KAA SL101C561KAA	CAPACITOR,560pF,100V,CER(C48)	17794 04222 51406	1
16	1A1A4C50	1181-0120 719J1GD1103PM251SB MKS4-R-.01/250/20%	CAPACITOR,0.01uF,250VAC,FILM(C50)	17794 59821 68919	1
17	1A1A4C51	1181-0119 719J1GG104PM251SB MKS4-R-.11/250/20%	CAPACITOR,0.1uF,250VAC,FILM(C51)	17794 59821 68919	1
18-22			ITEM NUMBERS NOT USED		
23	1A1A4CR1-CR10,CR12-CR16,CR19-CR22	1183-0020 1N4148 1N914	DIODE,1N4148/1N914(CR1-CR10,CR12-CR16, CR19-CR22)	17794 2S894 2S894	19
24	1A1A4CR11	1183-0047 IN4746A	DIODE, ZENER, 18V,1W,5%,1N4746A(CR11)	17794 8Z393	1
25	1A1A4CR17,CR18,CR25,CR27	1183-0007 1N4004	DIODE,1N4004(CR17,CR18,CR25,CR27)	17794 8Z393	4

DWG. NO: R6020-0074 REV: C EC NO: 4398 DATE: 09/08/95 APP:

TITLE: PCB, MULTIFUNCTION, PPS 400

INDEX	REFERENCE NO.	PART NO.	DESCRIPTION	FSCM	QTY
26	1A1A4CR23,CR24	1183-0041 MR752 G1752	DIODE,MR752(CR23,CR24)	17794 8Z393 14936	2
27	1A1A4CR26	1183-0035 ID5753 SE5051D HLMP-4601	DIODE,LED,RED,DIFFUSED,T-1 3/4"(CR26)	17794 53763 ZZZ 28480	1
28-32			ITEM NUMBERS NOT USED		
33	1A1A4H1-H6	1420-0017 AD43AH	RIVET,POP,1/8"D X 3/8"L(XQ20-XQ25)	17794 07707	6
34	1A1A4J31	1207-0244 09-65-1151 (2391 SERIES) 26-60-1150 (41761 SERIES)	HEADER,0.156"CTRS.,15POS.(J31)	17794 27264 27264	1
35	1A1A4J32	1207-0245 TST-117-01-L-D TST-117-01-G-D	HEADER,0.100"CTRS.,34 POS.(J32)	17794 55322 55322	1
36	1A1A4J33	1207-0197 26-60-1070 (41761 SERIES)	HEADER,0.156"CTRS.,7POS.(J33)	17794 27264	1
37	1A1A4J34	1207-0196 26-60-1020(41761 SERIES)	HEADER,0.156"CTRS.,2POS.(J34)	17794 27264	1
38	1A1A4L1	1192-0094 DC1-121	CHOKE, 120 uH,10%(L1)	17794 99848	1
39-42			ITEM NUMBERS NOT USED		
43	1A1A4MOV1	1179-0196 V275LA4 2322-593-02716	VARISTOR,METAL OXIDE, 275V,7mm(MOV1)	17794 34371 59821	1
44	1A1A4MP1-MP4	1209-0007 6073B 6073PB	HEAT SINK(XQ20,XQ22,XQ24,XQ25)	17794 13103 13103	4
45-49			ITEM NUMBERS NOT USED		
50	1A1A4PTC1	1179-0200 RXE017	THERMISTOR,PTC,4.85 OHM,170mA(PTC1)	17794 06090	1
51-54			ITEM NUMBERS NOT USED		

DWG. NO: R6020-0074 REV: C EC NO: 4398 DATE: 09/08/95 APP:

TITLE: PCB, MULTIFUNCTION, PPS 400

INDEX	REFERENCE NO.	PART NO.	DESCRIPTION	FSCM	QTY
55	1A1A4Q1,Q2,Q4,Q5,Q13,Q14,Q16	1187-0067 2N3904	TRANSISTOR,NPN,2N3904,TO-92(Q1,Q2,Q4,Q5,Q13, Q14,Q16	17794 8Z393	7
56	1A1A4Q3,Q6-Q12,Q15,Q17-Q19	1187-0049 2N3906 2N3906 2N3906	TRANSISTOR,PNP,2N3906,TO-92(Q3,Q6-Q12,Q15, Q17-Q19)	17794 OUST1 8Z393 27014	12
57	1A1A4Q20,Q22,Q24	1187-0092 TIP107 TIP107	TRANSISTOR,PNP,TIP107,TO220AB(Q20,Q22,Q24)	17794 8Z393 01295	3
58	1A1A4Q21	1187-0114 TIP100	TRANSISTOR,NPN,TIP100,TO-220AB(Q21)	17794 8Z393	1
59	1A1A4Q23	1187-0115 TIP31A	TRANSISTOR,NPN,TIP31A,TO-220AB(Q23)	17794 8Z393	1
60	1A1A4Q25	1189-0040 T041 OMJ Q6004L4	TRIAC,4A,600V,TO-220(Q25)	17794 ZZZ 58079	1
61-65			ITEM NUMBERS NOT USED		
66	1A1A4R1	1179-0177-20 CMF-55-37.4kohm,F,T-2 RG37.4kohm,T2-55,1% CRB25-37.4kohm-F-Y	RESISTOR,37.4 kOHM,MF,.125W,1%(R1)	17794 91637 11502 OUST1	1
67	1A1A4R2,R38	1179-0199 PT6KH(2.5)5KA PT6KH(2.5)5KA RVF6W01A-502	TRIMPOT,5 kOHM(R2,R38)	17794 54869 ZZZ 51406	2
68	1A1A4R3,R90	1179-0154 GENERIC	RESISTOR,10 MOHM,CF,.25W,5%(R3,R90)	17794 ZZZ	2
69	1A1A4R4	1179-0177-70 CMF-55-127kohm,F,T-2 RG127kohm,T2-55,1% CRB25-127kohm-F-Y	RESISTOR,127 kOHM,MF,.125W,1%(R4)	17794 91637 11502 OUST1	1
70	1A1A4R5	1179-0134-72 GENERIC	RESISTOR,1.8 MOHM,CF,.25W,5%(R5)	17794 ZZZ	1

DWG. NO: R6020-0074 REV: C EC NO: 4398 DATE: 09/08/95 APP:

TITLE: PCB, MULTIFUNCTION, PPS 400

INDEX	REFERENCE NO.	PART NO.	DESCRIPTION	FSCM	QTY
71	1A1A4R6,R66	1179-0134-09 GENERIC	RESISTOR,47 kOHMS,CF,.25W,5%(R6,R66)	17794 ZZZ	2
72	1A1A4R7,R15,R20,R30,R34	1179-0155 GENERIC	RESISTOR,1 MOHM,CF,.25W,5%(R7,R15,R20,R30,R34)	17794 ZZZ	5
73	1A1A4R8,R56,R57,R60,R68,R80-R82. R86,R88,R91-R93,R95-R97,R104, R114-R116,R118,R119,R128)	1179-0134-15 GENERIC	RESISTOR,10 kOHMS,CF,.25W,5%(R8,R56,R57,R60, R68,R80-R82,R86,R88,R91-R93,R95-R97,R104, R114-R116,R118,R119,R128	17794 ZZZ	23
74	1A1A4R9,R10,R29,R53	1179-0134-47 GENERIC	RESISTOR,20 kOHMS,CF,.25W,5%(R9,R10,R29,R53)	17794 ZZZ	4
75	1A1A4R11,R44,R45,R47-R49,R76	1179-0134-64 GENERIC	RESISTOR,470kOHM,CF,.25W,5%(R11,R44,R45,R47-49,R76)	17794 ZZZ	7
76	1A1A4R12,R33,R100,R103	1179-0134-55 GENERIC	RESISTOR,10 OHMS,CF,.25W,5%(R12,R33,R100,R103)	17794 ZZZ	4
77	1A1A4R13,R14,R21,R24,R28,R31,R39, R50,R55, R111,R112	1179-0134-39 GENERIC	RESISTOR,100 kOHMS,CF,.25W,5%(R13,R14,R21,R24, R28,R31,R39,R50,R55,R111,R112)	17794 ZZZ	11
78	1A1A4R16	1179-0134-34 GENERIC	RESISTOR,5.1kOHM,CF,.25W,5%(R16)	17794 ZZZ	1
79	1A1A4R17	1179-0177-76 CMF-55-23.7kohm,F-T-2 RG23.7kohm,T2-55,1% CRB25-23.7kohm-F-Y	RESISTOR,23.7 kOHM,MF,.125 W,1%(R17)	17794 91637 11502 OUST1	1
80	1A1A4R18	1179-0177-09 CMF-55-1kohm,F-T-2 RG1kohm,T2-55,1% CRB25-1kohm-F-Y	RESISTOR,1 kOHM,MF,.125W,1%(R18)	17794 91637 11502 OUST1	1
81	1A1A4R19	1179-0177-68 CMF-55-13.3kohm,F-T-2 RG13.3kohm,T2-55,1% CRB25-113.3kohm-F-Y	RESISTOR,13.3 kOHM,MF,.125W,1%(R19)	17794 91637 11502 OUST1	1

DWG. NO: R6020-0074 REV: C EC NO: 4398 DATE: 09/08/95 APP:

TITLE: PCB, MULTIFUNCTION, PPS 400

INDEX	REFERENCE NO.	PART NO.	DESCRIPTION	FSCM	QTY
82	1A1A4R22	1179-0177-83 CMF-55-4.75kohm,F-T-2 RG4.75kohm,T2-55,1% CRB25-4.75kohm-F-Y	RESISTOR,4.75 kOHM,MF,.125W,1%(R22)	17794 91637 11502 OUST1	1
83	1A1A4R25,R71	1179-0134-69 GENERIC	RESISTOR,270 kOHM,CF,.25W.5%(R25,R71)	17794 ZZZ	2
84	1A1A4R26	1179-0177-77 CMF-55-499kohm,F,T-2 RG499kohm,T2-55,1% CRB25-499kohm-F-Y	RESISTOR,499 kOHM,MF,.125 W,1%(R26)	17794 91637 11502 OUST1	1
85	1A1A4R27	1179-0134-18 GENERIC	RESISTOR,2.2 MOHM,CF,.25W,5%(R27)	17794 ZZZ	1
86	1A1A4R23,R32,R51,R52,R65,R83, R101	1179-0134-03 GENERIC	RESISTOR,1 kOHM,CF,.25W,5%(R23,R32,R51,R52,R65,R83 R101)	17794 ZZZ	7
87	1A1A4R35	1179-0177-80 CMF-55-348ohm,F,T-2 RG348ohm,T2-55,1% CRB25-348ohm-F-Y	RESISTOR,348 OHM,MF,.125W,1%(R35)	17794 91637 11502 OUST1	1
88	1A1A4R36	1179-0177-81 CMF-55-374ohm,F,T-2 RG374ohm,T2-55,1% CRB25-374ohm-F-Y	RESISTOR,374 OHM,MF,.125W,1%(R36)	17794 91637 11502 OUST1	1
89	1A1A4R37	1179-0177-82 CMF-55-698ohm,F,T-2 RG698ohm,T2-55,1% CRB25-698ohm-F-Y	RESISTOR,698 OHM,MF,.125W,1%(R37)	17794 91637 11502 OUST1	1
90	1A1A4R40,R41	1179-0134-35 GENERIC	RESISTOR,200 kOHMS,CF,.25W,5%(R40,R41)	17794 ZZZ	2
91	1A1A4R42,R46	1179-0134-78 GENERIC	RESISTOR,120kOHM,CF,.25W,5%(R42,R46)	17794 ZZZ	2
92	1A1A4R43	1179-0134-77 GENERIC	RESISTOR,82 kOHM,CF,.25W,5%(R43)	17794 ZZZ	1

DWG. NO: R6020-0074 REV: C EC NO: 4398 DATE: 09/08/95 APP:

TITLE: PCB, MULTIFUNCTION, PPS 400

INDEX	REFERENCE NO.	PART NO.	DESCRIPTION	FSCM	QTY
93	1A1A4R54,R77	1179-0134-42 GENERIC	RESISTOR,30 kOHMS,CF,.25W,5%(R54,R77)	17794 ZZZ	2
94	1A1A4R58	1179-0177-71 CMF-55-4.99kohm,F,T-2 RG4.99kohm,T2-55,1% CRB25-4.99kohm-F-Y	RESISTOR,4.99 kOHM,MF,.125W,1%(R58)	17794 91637 11502 OUST1	1
95	1A1A4R59	1179-0177-74 CMF-55-226kohm,F,T-2 RG226kohm,T2-55,1% CRB25-226kohm-F-Y	RESISTOR,226 kOHM,MF,.125W,1%(R59)	17794 91637 11502 OUST1	1
96	1A1A4R61	1179-0177-72 CMF-55-2.10kohm,F,T-2 RG2.10kohm,T2-55,1% CRB25-2.10kohm-F-Y	RESISTOR,2.10 kOHM,MF,.125W,1%(R61)	17794 91637 11502 OUST1	1
97	1A1A4R62	1179-0177-75 CMF-55-562ohm,F,T-2 RG562ohm,T2-55,1% CRB25-562ohm-F-Y	RESISTOR,562 OHM,MF,.125W,1%(R62)	17794 91637 11502 OUST1	1
98	1A1A4R63	1179-0177-38 CMF-55-18.2kohm,F,T-2 RG18.2kohm,T2-55,1% CRB25-18.2kohm-F-Y	RESISTOR,18.2 kOHM,MF,.125W,1%(R63)	17794 91637 11502 OUST1	1
99	1A1A4R64	1179-0177-87 CMF-55-412kohm,F,T-2 RG412kohm,T2-55,1% CRB25-412kohm-F-Y	RESISTOR,412 kOHM,MF,.125W,1%(R64)	17794 91637 11502 OUST1	1
100	1A1A4R67	1179-0134-01 GENERIC	RESISTOR,100 OHM,CF,.25W,5%(R67)	17794 ZZZ	1
101	1A1A4R69,R72,R75	1179-0177-79 CMF-55-150kohm,F,T-2 RG150kohm,T2-55,1% CRB25-150kohm-F-Y	RESISTOR,150 kOHM,MF,.125W,1%(R69,R72,R75)	17794 91637 11502 OUST1	3
102	1A1A4R70,R123	1179-0134-04 GENERIC	RESISTOR,1.5 kOHM,CF,.25W.5%(R70,R123)	17794 ZZZ	2

DWG. NO: R6020-0074 REV: C EC NO: 4398 DATE: 09/08/95 APP:

TITLE: PCB, MULTIFUNCTION, PPS 400

INDEX	REFERENCE NO.	PART NO.	DESCRIPTION	FSCM	QTY
103	1A1A4R73	1179-0135-06 GENERIC	RESISTOR,330 OHM,CF,.5W,5%(R73)	17794 ZZZ	1
104	1A1A4R74	1179-0177-73 CMF-55-147kohm,F,T-2 RG147kohm,T2-55,1% CRB25-147kohm-F-Y	RESISTOR,147 kOHM,MF,.125W,1%(R74)	17794 91637 11502 OUST1	1
105	1A1A4R78,R79,R99	1179-0134-73 GENERIC	RESISTOR,910 OHM,CF,.25W,5%(R78,R79,R99)	17794 ZZZ	3
106	1A1A4R84,R89,R98	1179-0134-65 GENERIC	RESISTOR,1.3 kOHM,CF,.25W,5%(R84,R89,R98)	17794 ZZZ	3
107	1A1A4R85	1179-0177-60 CMF-55-1Mohm,F,T-2 RG1Mohm,T2-55,1% CRB25-1Mohm-F-Y	RESISTOR,1 MOHM,MF,.125W,1%(R85)	17794 91637 11502 OUST1	1
108	1A1A4R87,R106,R108	1179-0134-31 GENERIC	RESISTOR,51 kOHM,CF,.25W,5%(R87,R106,R108)	17794 ZZZ	3
109	1A1A4R94	1179-0134-79 GENERIC	RESISTOR,5.1 MOHM,CF,.25W,5%(R94)	17794 ZZZ	1
110	1A1A4R102	1179-0134-12 GENERIC	RESISTOR,9.1 kOHM,CF,.25W,5%(R102)	17794 ZZZ	1
111	1A1A4R105	1179-0135-07 GENERIC	RESISTOR,560 OHM,CF,.5W,5%(R105)	17794 ZZZ	1
112	1A1A4R107	1179-0134-11 GENERIC	RESISTOR,12 kOHM,CF,.25W,5%(R107)	17794 ZZZ	1
113	1A1A4R109	1179-0136-04 CF100270ohm5%T MO-1-270-5%	RESISTOR,270 OHMS,CF,1W,5%(R109)	17794 56637 11502	1
114	1A1A4R110	1179-0134-14 GENERIC	RESISTOR,330 OHMS,CF,.25W,5%(R110)	17794 ZZZ	1
115	1A1A4R113	1179-0197-01 SC3D-0.25	RESISTOR,0.25 OHMS,WW,3W,1%(R113)	17794 12697	1
116	1A1A4R117	1179-0198-01 CF200S820ohm5%T MO-2-820-5%	RESISTOR,820 OHMS,CF,2W,5%(R117)	17794 56637 11502	1

DWG. NO: R6020-0074 REV: C EC NO: 4398 DATE: 09/08/95 APP:

TITLE: PCB, MULTIFUNCTION, PPS 400

INDEX	REFERENCE NO.	PART NO.	DESCRIPTION	FSCM	QTY
117	1A1A4R120	1179-0134-29 GENERIC	RESISTOR,4.7 kOHM,CF,.25W,5%(R120)	17794 ZZZ	1
118	1A1A4R121	1179-0197-02 SC3D-0.1	RESISTOR,0.1 OHM,WW,3W,1%(R121)	17794 12697	1
119	1A1A4R122	1179-0134-75 GENERIC	RESISTOR,220 OHM,CF,.25W,5%(R122)	17794 ZZZ	1
120	1A1A4R124	1179-0068 CF50s33ohm5%T CF-1/2-33ohm-5%	RESISTOR,33 OHM,CF,.5W,5%(R124)	17794 56637 11502	1
121	1A1A4R125,R127	1179-0135-01 GENERIC	RESISTOR,1 kOHM,CF,.5W,5%(R125,R127)	17794 ZZZ	2
122	1A1A4R126	1179-0135-08 GENERIC	RESISTOR,2.7 OHM,CF,.5W,5%(R126)	17794 ZZZ	1
123-128			ITEM NUMBERS NOT USED		
129	1A1A4TP1	1300-0004 TP-102-02	TERMINAL, TEST POINT (TP1)	17794 26364	1
130-135			ITEM NUMBERS NOT USED		
136	1A1A4U1,U6	1187-0063 LM324AN LM324AN LM324AN	IC,LM324AN OP AMP,QUAD PK(U1,U6)	17794 27014 01295 04713	2
137	1A1A4U2	1187-0046 LM358N GL358	IC,LM358N OP AMP,DUAL PK(U2)	17794 27014 ZZZ	1
138	1A1A4U3	1187-0127 MC34074P	IC,MC34074P,OP AMP QUAD PK(U3)	17794 8Z393	1
139	1A1A4U4	1187-0111 MC1454IBCP CD4541BE	IC,4541 CMOS TIMER(U4)	17794 8Z393 34371	1
140	1A1A4U5	1187-0036 ICM7555IPA	IC,ICM7555IPA CMOS TIMER(U5)	17794 34371	1
141	1A1A4U7	1187-0112 MC14011BCP CD4011BE	IC,4011B CMOS QUAD NAND(U7)	17794 8Z393 34371	1

DWG. NO: R6020-0074 REV: C EC NO: 4398 DATE: 09/08/94 APP:

TITLE: PCB, MULTIFUNCTION, PPS 400

INDEX	REFERENCE NO.	PART NO.	DESCRIPTION	FSCM	QTY
142	1A1A4U8,U9	1187-0118 CD4001BE MC14001BCP	IC,4001B CMOS QUAD NOR(U8,U9)	17794 34371 8Z393	2
143	1A1A4U10	1187-0113 MOC3023	IC,MOC3023 TRIAC DRIVER(U10)	17794 8Z393	1

BLANK

REVISIONS				
LEVEL	AUTHORIZATION	DES. ENG. INITIAL	MFG ENG. INITIAL	RELEASE APPROVAL INITIAL/DATE
A	EC 3758	C.CARDINO	M.PANT	03/04/84
B	EC 4114	C.CARDINO	M.PANT	11/11/84
C	EC 4398	C.CARDINO	M.PANT	08/08/86

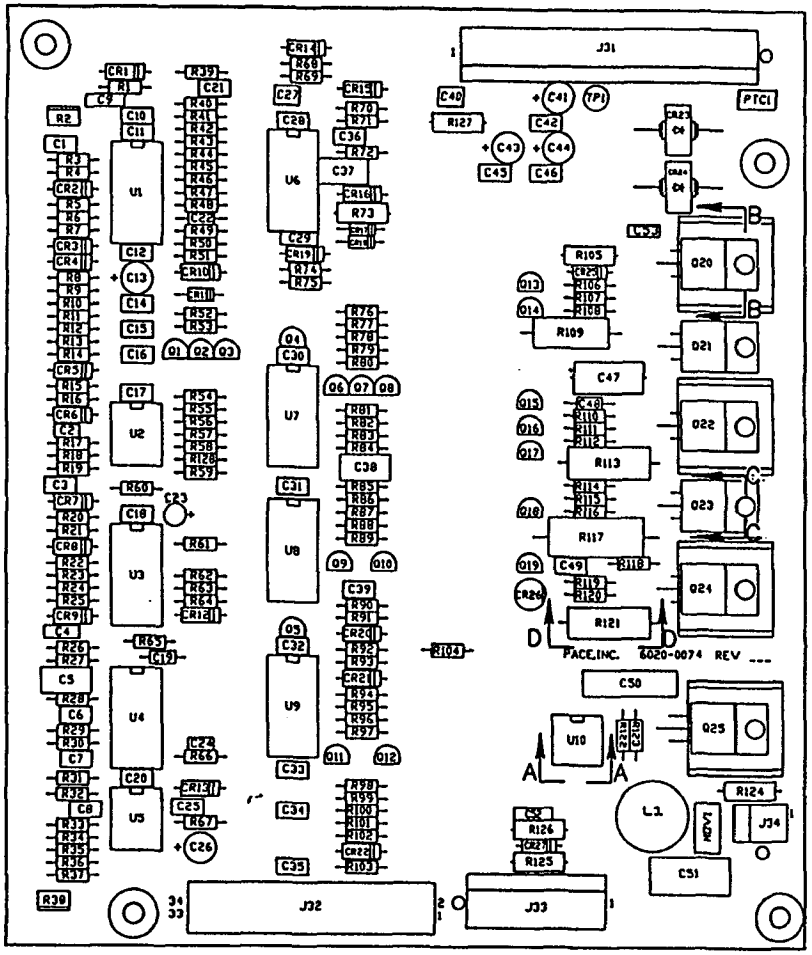

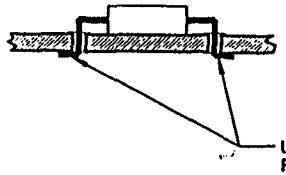

SECTION A–A

SECTION D–D

CAUTION
SENSITIVE ELECTRONIC DEVICES
DO NOT SHIP OR STORE NEAR STRONG
ELECTROSTATIC, ELECTROMAGNETIC,
MAGNETIC OR RADIOACTIVE FIELDS

The data in this proposal shall not be used or disclosed, except for evaluation purposes, provided that if a contract is awarded to this submitter as a result of or in connection with the submission of this proposal, the Government shall have the right to use or disclose the included data to the extent provided in the contract. This restriction does not limit the Government's right to use or disclose any included data which is not proprietary to the submitter or is obtained from another source without restriction.

PROPRIETARY SOURCE CONTROL DRAWING

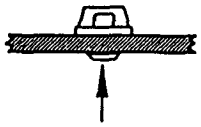

POP RIVET HEAD
(SOLDER SIDE OF BOARD)

SECTION C–C

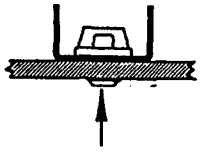

POP RIVET HEAD
(SOLDER SIDE OF BOARD)

SECTION B–B

THIS DRAWING CONTAINS INFORMATION PROPRIETARY TO PACE INC. ANY REPRODUCTION, DISCLOSURE OR USE OF THIS DRAWING IS EXPRESSLY PROHIBITED EXCEPT AS PACE INC. MAY OTHERWISE AGREE IN WRITING.

UNLESS OTHERWISE SPECIFIED DIMENSIONS ARE IN INCHES. DO NOT SCALE.

TOLERANCES		
2 PLACE	3 PLACE	ANGLES
±.01	±.005	±.5°

MATERIAL –

FINISH –

PACE

PCB, MULTIFUNCTION
PPS 400

F.S.C.M. NO.	DWG. NO.
17794	R6020–0074

REF. SCALE – | SH – | SHEET 1 OF 1

A215 1A1A4 6020-0074

DWG NO. C

PACE INCORPORATED

PROPRIETARY PARTS LIST

The data in this proposal shall not be used or disclosed, except for evaluation purposes, provided that if a contract is awarded to this submitter as a result of or in connection with the submission of this proposal, the Government shall have the right to use or disclose this technical data to the extent provided in the contract. This restriction does not limit the Government's right to use or disclose any technical data which is not proprietary to the submitter or is obtained from another source without restriction.

DWG. NO: R6020-0072 REV: B EC NO: 4398 DATE: 09/08/95 APP:

TITLE: PCB, MICROPROCESSOR, PPS 400

INDEX	REFERENCE NO.	PART NO.	DESCRIPTION	FSCM	QTY
REF	1A1A5	6020-0072	PCB, MICROPROCESSOR, PPS 400	17794	REF
1	1A1A5C2-C5,C8-C11,C14,C15, C18,C20,C24, C26,C27,C31-C33	1181-0060	CAPACITOR,.1uF,50V,CER(C2-C5,C8-C11,C14,C15,C18, C20,C24,C26,C27,C31-C33)	17794	18
		923CZ5U103M050B		56289	
		P103M26Z5UFVPWA		59821	
2	1A1A5C7	1181-0093	CAPACITOR,10uF,35V,TANT(C7)	17794	1
		TAP106M035S		04222	
		T350G106M035AS		31433	
3	1A1A5C12,C13	1181-0105	CAPACITOR,33pF,100V,CER(C12,C13)	17794	2
		CK05BX330K		31433	
		C317C330J2G5CA		31433	
4	1A1A5C16	1181-0085	CAPACITOR,.22uF,100V,POLY(C16)	17794	1
		ECQ-E1224KZ		PNSNC	
5	1A1A5C19,C29	1181-0070	CAPACITOR,.01uF,50V,CER(C19,C29)	17794	2
		ME212-2145-103Z		MOSRE	
6	1A1A5C21	1181-0103	CAPACITOR,1uF,35V,TANT(C21)	17794	1
		T350A105K035AS		31433	
7	1A1A5C22	1181-0113	CAPACITOR,.1uF,100V,FILM(C22)	17794	1
		712A1XC104PJ101SG		59821	
		MKS 2 0.1uf 100V 5%		68919	
8	1A1A5C23	1181-0126	CAPACITOR,2.2uF,50V,AL EL(C23)	17794	1
		225TTA050M		74840	
9	1A1A5C25,C28,C30	1181-0125	CAPACITOR,.10uF,63V,POLY(C25,C28,C30)	17794	3
		MKT1817410065		4U402	
10	1A1A5C34	1181-0102	CAPACITOR,100pF,200V,CER(C34)	17794	1
		C052C101K2G5CA		31433	
11-15			ITEM NUMBERS NOT USED		

DWG. NO: R6020-0072 REV: B EC NO: 4398 DATE: 09/08/95 APP:

TITLE: PCB, MICROPROCESSOR, PPS 400

INDEX	REFERENCE NO.	PART NO.	DESCRIPTION	FSCM	QTY
16	1A1A5CR1-CR5,CR9,CR10	1183-0020 1N4148 1N914	DIODE,1N4148/1N914(CR1-CR5,CR9,CR10)	17794 2S894 2S894	7
17	1A1A5CR6	1183-0049 1N5230B	DIODE,ZENER,4.7V,500mW,5%,1N5230B(CR6)	17794 8Z393	1
18	1A1A5CR7	1183-0043 MZ4615(NO SUFFIX) 1N4615(NO SUFFIX)	DIODE,ZENER,2V,5%,1N4615(CR7)	17794 8Z393 MCRSI	1
19-23			ITEM NUMBERS NOT USED		
24	1A1A5E1	1207-0250 63525-1	TAB,PC MOUNT,.187/.032(E1)	17794 09769	1
25	1A1A5E2	1207-0249 1287	TAB,PC MOUNT,.25(E2)	17794 91833	1
26-28			ITEM NUMBERS NOT USED		
29	1A1A5H1	1349-0254 WIT-18V	TYWRAP,NYLON,.1 WIDE X 8" LG(XU3)	17794 06915	1
30-33			ITEM NUMBERS NOT USED		
34	1A1A5H2-H6	1405-0017 GENERIC	SCREW, BINDER HD, #4-40 X 5/16" SLOT(XQ2,XQ7, XQ10,U1,Q17)	17794 ZZZ	5
35	1A1A5H7-H11	1410-0019 GENERIC	NUT, HEX W/LOCKWASHER, #4-40(XQ2,XQ7,XQ10, U1,Q17)	17794 ZZZ	5
36-38			ITEM NUMBERS NOT USED		
39	1A1A5J1	1207-0247 26-60-1160	HEADER,0.156 CTR.,16POS.(J1)	17794 27264	1
40	1A1A5J2	1332-0157 17-006-171 1-86947-6	CABLE,FLAT,17 CONDUCTOR,6"LG(J2)	17794 51167 09769	1
41	1A1A5J3	1207-0202 22-23-2161	HEADER,.100 CTR.,16POS.(J3)	17794 27264	1
42	1A1A5J4	1207-0234 22-23-2021	HEADER,0.100 CTR.,2POS.(J4)	17794 27264	1

DWG. NO: R6020-0072 REV: B EC NO: 4398 DATE: 09/08/95 APP:

TITLE: PCB, MICROPROCESSOR, PPS 400

INDEX	REFERENCE NO.	PART NO.	DESCRIPTION	FSCM	QTY
43	1A1A5J5	1207-0236 26-60-1130	HEADER,0.156 CTR.,13POS(J5)	17794 27264	1
44-46			ITEM NUMBERS NOT USED		
47	1A1A5LS1	1187-0104 QMB-06	SPEAKER(LS1)	17794 2J967	1
48-50			ITEM NUMBERS NOT USED		
51	1A1A5MP1,MP2	1209-0007 6073B 6073PB	HEATSINK(XU1,XQ17)	17794 13103 13103	2
52	1A1A5MP3-MP5	1209-0033 563202B 6032B-TT	HEATSINK,TO-220(XQ2,XQ7,XQ10)	17794 30161 13103	3
53-54			ITEM NUMBERS NOT USED		
55	1A1A5Q1,Q3,Q6,Q9,Q12,Q26	1187-0067 2N3904	TRANSISTOR,NPN,2N3904,TO-92(Q1,Q3,Q6,Q9,Q12,Q26)	17794 8Z393	6
56	1A1A5Q2,Q7,Q10	1189-0042 T0810DJ	TRIAC,TO810DJ,TO-220,8.OA,400V(Q2,Q7,Q10)	17794 ZZZ	3
57	1A1A5Q4,Q5,Q8,Q11,Q22-24	1187-0049 2N3906 2N3906 2N3906	TRANSISTOR,PNP,2N3906,TO-92(Q4,Q5,Q8,Q11,Q22-Q24)	17794 OUST1 8Z393 27014	7
58	1A1A5Q13-Q16	1187-0097 2N4403	TRANSISTOR,PNP,2N4403,TO-92(Q13-Q16)	17794 8Z393	4
59	1A1A5Q17	1187-0092 TIP107 TIP107	TRANSISTOR,PNP,TIP107,TO-220AB(Q17)	17794 8Z393 01295	1
60	1A1A5Q18-Q20	1189-0041 MAC97A4	TRIAC,MAC97A4,0.6A,200V,TO-226AA(Q18-Q20)	17794 8Z393	3
61	1A1A5Q21	1187-0119 MPSA13	TRANSISTOR,NPN,MPSA13,TO-92(Q21)	17794 8Z393	1
62	1A1A5Q25	1187-0159 2N7000 2N7000	TRANSISTOR,2N7000,N-CHAN,TO-92(Q25)	17794 34371 8Z393	1
63-65			ITEM NUMBERS NOT USED		

DWG. NO: R6020-0072 REV: B EC NO: 4398 DATE: 09/08/95 APP:

TITLE: PCB, MICROPROCESSOR, PPS 400

INDEX	REFERENCE NO.	PART NO.	DESCRIPTION	FSCM	QTY
66	1A1A5R1,R32,R34	1179-0134-39 GENERIC	RESISTOR,100 kOHM,CF,.25W,5%(R1,R32,R34)	17794 ZZZ	3
67	1A1A5R2,R20,R21,R24,R29,R30,R36	1179-0134-15 GENERIC	RESISTOR,10 kOHM,CF,.25W,5%(R2,R20,R21,R24,R29 R30,R36)	17794 ZZZ	7
68	1A1A5R3,R35	1179-0155 GENERIC	RESISTOR,1 MOHM,CF,.25W,5%(R3,R35)	17794 ZZZ	2
69	1A1A5R4,R6,R9	1179-0134-74 GENERIC	RESISTOR,3.6 kOHM,CF,.25W,5%(R4,R6,R9)	17794 ZZZ	3
70	1A1A5R5,R8,R10	1179-0134-14 GENERIC	RESISTOR,330 OHM,CF,.25W,5%(R5,R8,R10)	17794 ZZZ	3
71	1A1A5R7,R47,R18	1179-0134-29 GENERIC	RESISTOR,4.7 kOHM,CF,.25W,5%(R7,R47,R18)	17794 ZZZ	3
72	1A1A5R11	1179-0201 CP-5-100ohm	RESISTOR,100 OHM,WW,5W,10%(R11)	17794 91637	1
73	1A1A5R12	1179-0134-05 GENERIC	RESISTOR,2.2 kOHM,CF,.25W,5%(R12)	17794 ZZZ	1
74	1A1A5R13,R33,R57,R58	1179-0134-09 GENERIC	RESISTOR,47 kOHM,CF,.25W,5%(R13,R33,R57,R58)	17794 ZZZ	4
75	1A1A5R14-R16	1179-0134-04 GENERIC	RESISTOR,1.5 kOHM,CF,.25W,5%(R14-R16)	17794 ZZZ	3
76	1A1A5R17	1179-0177-09 CMF-55-1kohm,F,T-2 RG1kohm,T2-55,1% CRB25-1kohm-F-Y	RESISTOR,1 kOHM,MF,.125W,1%(R17)	17794 91637 11502 OUST1	1
77	1A1A5R19	1179-0177-65 CMF-55-3.16kohm,F,T-2 RG3.16kohm,T2-55,1% CRB25-3.16kohm-F-Y	RESISTOR,3.16 kOHM,MF,.125W,1%(R19)	17794 91637 11502 OUST1	1
78	1A1A5R22	1179-0134-66 GENERIC	RESISTOR,3 kOHM,CF,.25W,5%(R22)	17794 ZZZ	1
79	1A1A5R23,R52,R53,R54,R56	1179-0134-03 GENERIC	RESISTOR,1 kOHM,CF,.25W,5%(R23,R52,R53,R54,R56)	17794 ZZZ	5

DWG. NO: R6020-0072 REV: B EC NO: 4398 DATE: 09/08/95 APP:

TITLE: PCB, MICROPROCESSOR, PPS 400

INDEX	REFERENCE NO.	PART NO.	DESCRIPTION	FSCM	QTY
80	1A1A5R25	1179-0134-76 GENERIC	RESISTOR,15 kOHM,CF,.25W,5%(R25)	17794 ZZZ	1
81	1A1A5R26-R28	1179-0177-06 CMF-55-10kohm,F,T-2 RG10kohm,T2-55,1% CRB25-10kohm-F-Y	RESISTOR,10 kOHM,MF,.125W,1%(R26-R28)	17794 91637 11502 OUST1	3
82	1A1A5R31	1179-0134-69 GENERIC	RESISTOR,270 kOHM,CF,.25W,5%(R31)	17794 ZZZ	1
83	1A1A5R37	1179-0134-20 GENERIC	RESISTOR,24 kOHM,CF,.25W,5%(R37)	17794 ZZZ	1
84	1A1A5R38,R41	1179-0177-56 CMF-55-24.3kohm,F,T-2 RG24.3kohm,T2-55,1% CRB25-24.3kohm-F-Y	RESISTOR,24.3 kOHM,MF,.125W,1%(R38,R41)	17794 91637 11502 OUST1	2
85	1A1A5R39,R42	1179-0177-84 CMF-55-105kohm,F,T-2 RG105kohm,T2-55,1% CRB25-105kohm-F-Y	RESISTOR,105 kOHM,MF,.125W,1%(R39,R42)	17794 91637 11502 OUST1	2
86	1A1A5R40	1179-0134-01 GENERIC	RESISTOR,100 OHM,CF,.25W,5%(R40)	17794 ZZZ	1
87	1A1A5R43,R44	1179-0177-50 CMF-55-100kohm,F,T-2 RG100kohm,T2-55,1% CRB25-100kohm-F-Y	RESISTOR,100 kOHM,MF,.125W,1%(R43,R44)	17794 91637 11502 OUST1	2
88	1A1A5R45	1179-0177-85 CMF-55-511kohm,F,T-2 RG511kohm,T2-55,1% CRB25-511kohm-F-Y	RESISTOR,511 kOHM,MF,.125W,1%(R45)	17794 91637 11502 OUST1	1
89	1A1A5R46	1179-0134-35 GENERIC	RESISTOR,200 kOHM,CF,.25W,5%(R46)	17794 ZZZ	1
90	1A1A5R48	1179-0189 GENERIC	RESISTOR,100 OHM,.25W,.1%(R48)	17794 ZZZ	1
91	1A1A5R49	1179-0134-11 GENERIC	RESISTOR,12 kOHM,CF,.25W,5%(R49)	17794 ZZZ	1

DWG. NO: R6020-0072 REV: B EC NO: 4398 DATE: 09/08/95 APP:

TITLE: PCB, MICROPROCESSOR, PPS 400

INDEX	REFERENCE NO.	PART NO.	DESCRIPTION	FSCM	QTY
92	1A1A5R50	1179-0190 GENERIC	RESISTOR,291 OHM,.25W,.1%(R50)	17794 ZZZ	1
93	1A1A5R51	1179-0134-02 GENERIC	RESISTOR,820 OHM,CF,.25W,5%(R51)	17794 ZZZ	1
94	1A1A5R55	1179-0134-80 GENERIC	RESISTOR,36 OHM,CF,.25W,5%(R55)	17794 ZZZ	1
95-97			ITEM NUMBERS NOT USED		
98	1A1A5RN1	1179-0187-03 4308R-102-681	RESISTOR,SIP,8 PIN,680 OHM,.125W,2%(RN1)	17794 32997	1
99	1A1A5RN2	1179-0187-02 4310R-101-473	RESISTOR,SIP,10 PIN,47 kOHM,.125W,2%(RN2)	17794 32997	1
100	1A1A5RN3	1179-0187-01 4310R-101-103	RESISTOR,SIP,10 PIN,10 kOHM,.125W,2%(RN3)	17794 32997	1
101	1A1A5RN4	1179-0188-03 4114R-0011-472	RESISTOR,DIP,14 PIN,4.7 kOHM,.125W,2%(RN4)	17794 32997	1
102	1A1A5RN5	1179-0188-02 4116R-001-330	RESISTOR,DIP,16 PIN,33 OHM,.125W,2%(RN5)	17794 32997	1
103-105			ITEM NUMBERS NOT USED		
106	1A1A5TP1	1300-0004 TP-102-02	TERMINAL,TEST POINT(TP1)	17794 26364	1
107-108			ITEM NUMBERS NOT USED		
109	1A1A5U1	1187-0039 LM340T-5 LM340-5	IC,LM340-5 REGULATOR,+5V(U1)	17794 27014 01295	1
110	1A1A5U2	1187-0122 LM320LZ-5.0	IC,LM320LZ-5 REGULATOR,-5V(U2)	17794 27014	1
111	1A1A5U3	1187-0110	MICROCONTROLLER,MASKED,VERSION1.1(U3)	17794	1
112	1A1A5U4	1187-0109 NM93C46N XLS93C46P TS93C46P	IC,93C46,EEPROM,CMOS(U4)	17794 27014 66419 ZZZ	1
113	1A1A5U5,U6	1187-0125 ULN-2004A	IC,ULN-2004A ARRAY,TRANSISTOR(U5,U6)	17794 SPRGE	2

DWG. NO: R6020-0072 REV: B EC NO: 4398 DATE: 09/08/95 APP: M

TITLE: PCB, MICROPROCESSOR, PPS 400

INDEX	REFERENCE NO.	PART NO.	DESCRIPTION	FSCM	QTY
114	1A1A5U7	1187-0120 MM74HC374N	IC,74HC374N CMOS OCTAL D-TYPE FLIP-FLOP(U7)	17794 27014	1
115	1A1A5U8	1187-0075 LM339AN LM339AN LM339AN	IC,LM339AN,DIFF.COMPARATOR(U8)	17794 27014 01295 ZZZ	1
116	1A1A5U9	1187-0046 LM358N GL358	IC,LM358N, OP AMP, DUAL PK(U9)	17794 27014 ZZZ	1
117	1A1A5U10	1187-0124 TC500ACPE	IC,TC500A, PROCESSOR, ANALOG(U10)	17794 15818	1
118	1A1A5U11	1187-0126 DG507ACJ	IC,DG507A,ANALOG MULTIPLEXER,DUAL 8TO1(U11)	17794 34371	1
119-120			ITEM NUMBERS NOT USED		
121	1A1A5XU3	1207-0177 2-641606-3 A-42000-4030	SOCKET,40 PINS(XU3)	17794 09769 27264	1
122-124			ITEM NUMBERS NOT USED		
125	1A1A5Y1	1180-0002 CSA12.0MT KBR-12.0M	RESONATOR,12.0 MHZ,CER(Y1)	17794 51406 04222	1

REVISIONS				
LEVEL	AUTHORIZATION	DES ENG INITIAL	MFG ENG INITIAL	RELEASE APPROVAL INITIAL DATE
A	EC 3798	C CARDNO	M PANT	03/04/94
B	EC 4398	C CARDNO	M PANT	09/06/95

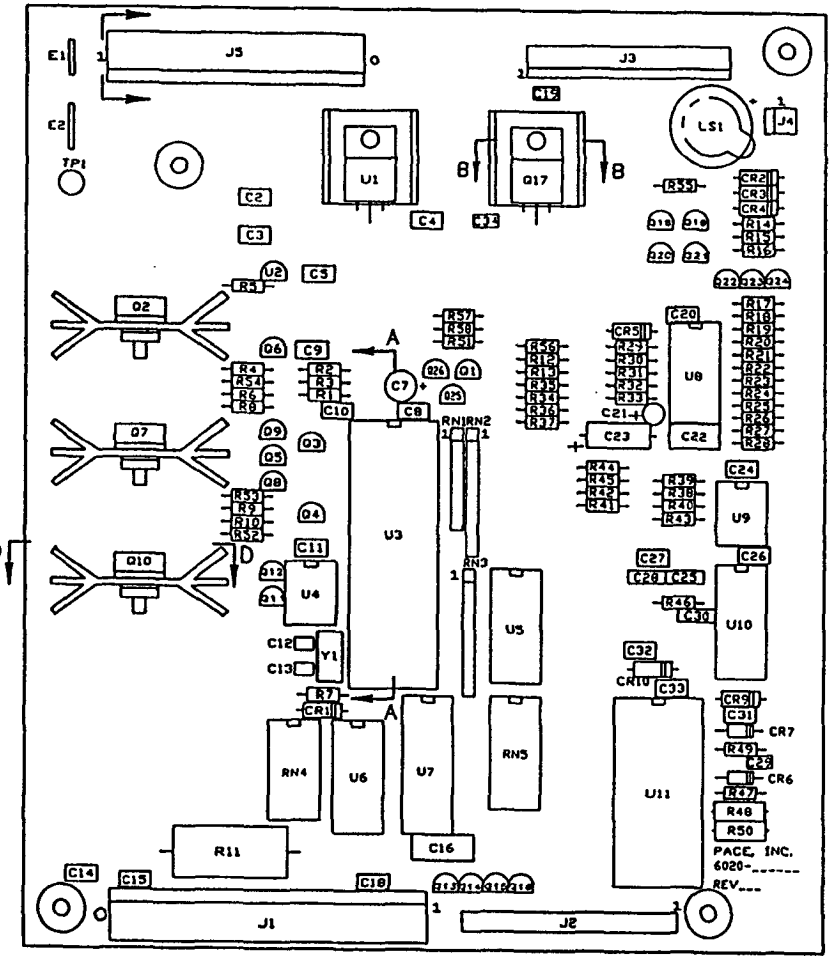

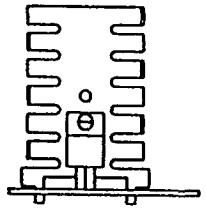

VIEW D–D

SECTION A–A

SCREW HEAD
(SOLDER SIDE OF BOARD)

SECTION B–B

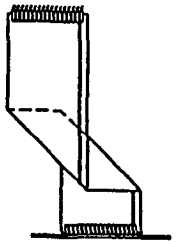

RIBBON DETAIL
SCALE 1/1

The data in this proposal shall not be used or disclosed, except for evaluation purposes, provided that if a contract is awarded to this submitter as a result of or in connection with the submission of this proposal, the Government shall have the right to use or disclose this technical data to the extent provided in the contract. This restriction does not limit the Government's right to use or disclose any technical data which is not proprietary to the submitter or is obtained from another source without restriction.

PROPRIETARY ASSEMBLY DRAWING

THIS DRAWING CONTAINS INFORMATION PROPRIETARY TO PACE INC.. ANY REPRODUCTION, DISCLOSURE OR USE OF THIS DRAWING IS EXPRESSLY PROHIBITED EXCEPT AS PACE INC. MAY OTHERWISE AGREE IN WRITING.

UNLESS OTHERWISE SPECIFIED DIMENSIONS ARE IN INCHES. DO NOT SCALE.

TOLERANCES		
2 PLACE	3 PLACE	ANGLES
± .01	± .005	± .5°

MATERIAL: –

FINISH: –

PACE® PACE, Incorporated 5000 Bowers Circle Laurel, MD 20723 U.S.A. TEL (301) 490-8900 FAX (301) 490-2140

Systems for Development, Production, and Repair of Electronic Assemblies

PCB, MICROPROCESSOR
PPS 400

F.S.C.M. NO.	DWG. NO.
17794	R6020–0072

REF. SCALE – | DR – | SHEET 1 OF 1

A476 1A1A5 6020-0072

PAGE® INCORPORATED

PROPRIETARY PARTS LIST

The data in this proposal shall not be used or disclosed, except for evaluation purposes, provided that if a contract is awarded to this submitter as a result of or in connection with the submission of this proposal, the Government shall have the right to use or disclose this technical data to the extent provided in the contract. This restriction does not limit the Government's right to use or disclose any technical data which is not proprietary to the submitter or is obtained from another source without restriction.

DWG. NO: R6020-0073 REV: A EC NO: 3759 DATE: 3/4/94 APP:

AMENDED P/L FORMAT: 8/23/94

TITLE: PCB,DISPLAY, PPS 400

INDEX	REFERENCE NO.	PART NO.	DESCRIPTION	FSCM	QTY
REF	1A1A6	6020-0073	PCB,DISPLAY, PPS 400	17794	REF
1	1A1A6D1-D3	1183-0034	DISPLAY, LED,RED,.3",SEVEN SEGMENT(D1-D3)	17794	3
		SEA3111		ZZZ	
		5082-7611		28480	
2	1A1A6D4-D10	1183-0035	DIODE,LED,RED,DIFFUSED,T-1 3/4"(D4-D10)	17794	7
		ID5753		53763	
		SE5051D		ZZZ	
		HLMP-4601		28480	
3	1A1A6D11	1183-0040	DIODE,LED,GREEN,DIFFUSED,T-1 3/4"(D11)	17794	1
		HLMP-3507		28480	
4-8			ITEM NUMBERS NOT USED		
9	1A1A6J21	1207-0246	CONNECTOR,17 POS.,.100 CTR(J21)	17794	1
		643649-6		09769	
10-13			ITEM NUMBERS NOT USED		
14	1A1A6MP1-MP6	1311-0110	KEYCAP,SWITCH,GRAY(SW1-SW6)	17794	6
15-19			ITEM NUMBERS NOT USED		
20	1A1A6SW1-SW6	1187-0105	SWITCH,PCB PUSH BUTTON(SW1-SW6)	17794	6
		KSA0M431		31918	

REVISIONS				
LEVEL	AUTHORIZATION	DES ENG INITIAL	MFG ENG INITIAL	RELEASE APPROVAL INITIAL DATE
A	EC 3759	C. CORONO	W. PART	3/4/88

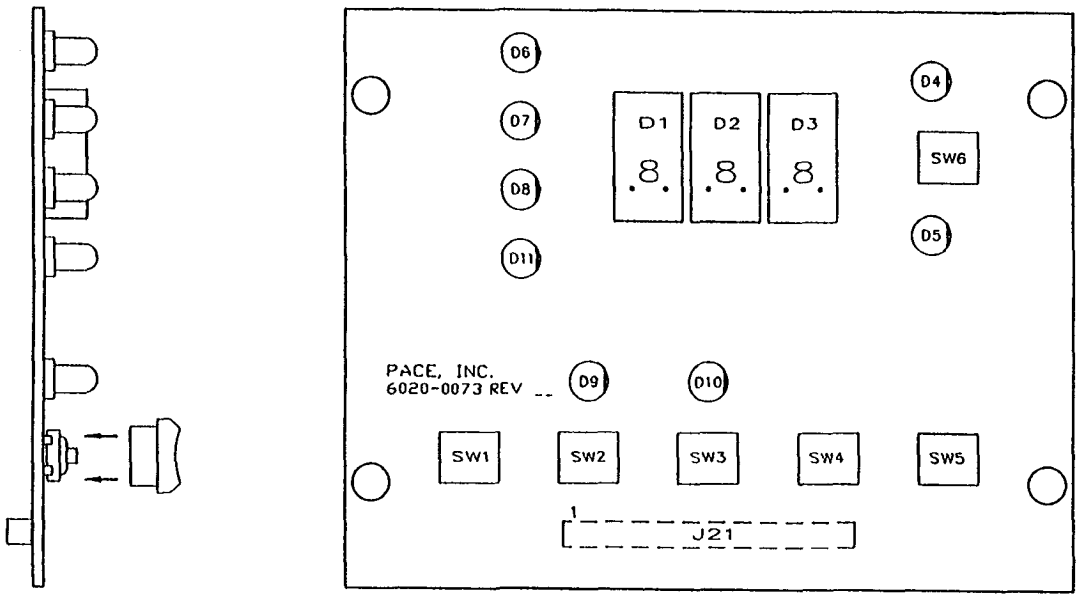

The data in this proposal shall not be used or disclosed, except for evaluation purposes, provided that if a contract is awarded to this submitter as a result of or in connection with the submission of this proposal, the Government shall have the right to use or disclose this technical data to the extent provided in the contract. This restriction does not limit the Government's right to use or disclose any technical data which is not proprietary to the submitter or is obtained from another source without restriction.

PROPRIETARY ASSEMBLY DRAWING

THIS DRAWING CONTAINS INFORMATION PROPRIETARY TO PACE INC. ANY REPRODUCTION, DISCLOSURE OR USE OF THIS DRAWING IS EXPRESSLY PROHIBITED EXCEPT AS PACE INC. MAY OTHERWISE AGREE IN WRITING.

PACE

PACE Incorporated
5001 Brown Court
Lawrence 18040 U.S.A.
TEL (201) 400 5000 FAX (201) 400 2140

Systems for Development, Production and Repair of Electronic Assemblies

UNLESS OTHERWISE SPECIFIED DIMENSIONS ARE IN INCHES DO NOT SCALE.

TOLERANCES		
2 PLACE	3 PLACE	ANGLES
±.01	±.005	±.5°

MATERIAL: –

FINISH: –

PCB, DISPLAY
PPS 400

FSCM NO	DWG NO
17794	R6020-0073

REF SCALE 2/1 | SK– | SHEET 1 OF 1

3A1A6 6020-0073

DWG NO CR6020-0073 A

PACE INCORPORATED

PROPRIETARY PARTS LIST

The data in this proposal shall not be used or disclosed, except for evaluation purposes, provided that if a contract is awarded to this submitter as a result of or in connection with the submission of this proposal, the Government shall have the right to use or disclose this technical data to the extent provided in the contract. This restriction does not limit the Government's right to use or disclose any technical data which is not proprietary to the submitter or is obtained from another source without restriction.

DWG. NO: R1207-0270 REV: A EC NO: 3759 DATE: 3/4/94 APP: m

AMENDED P/L FORMAT: 8/23/94

TITLE: RECEPTACLE ASSY

INDEX	REFERENCE NO.	PART NO.	DESCRIPTION	FSCM	QTY
REF	1A1J40 1A1J41 1A1J42 1A1J43 1A1J52 1A1J57 1A1J58 1A1J59	1207-0270	RECEPTACLE ASSY	17794	REF

DWG NO. B 1207-0270 | A

REVISIONS				
LEVEL	AUTHORIZATION	DES. ENG. INITIAL	MFG. ENG. INITIAL	RELEASE APPROVAL INITIAL/DATE
A	EC 3759	C.CARDNO	M.PANT	3/4/9

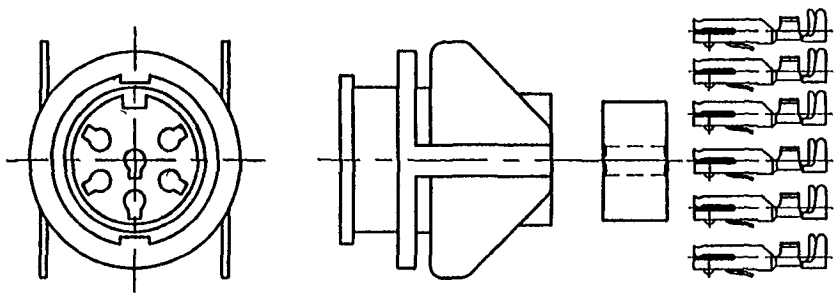

1A1J40	1207-0270
1A1J41	1207-0270
1A1J42	1207-0270
1A1J43	1207-0270
1A1J52	1207-0270
1A1J57	1207-0270
1A1J58	1207-0270
1A1J59	1207-0270

The data in this proposal shall not be used or disclosed, except for evaluation purposes, provided that if a contract is awarded to this submitter as a result of or in connection with the submission of this proposal, the Government shall have the right to use or disclose this technical data to the extent provided in the contract. This restriction does not limit the Government's right to use or disclose any technical data which is not proprietary to the submitter or is obtained from another source without restriction.

PROPRIETARY ASSEMBLY DRAWING

THIS DRAWING CONTAINS INFORMATION PROPRIETARY TO PACE INC.. ANY REPRODUCTION, DISCLOSURE OR USE OF THIS DRAWING IS EXPRESSLY PROHIBITED EXCEPT AS PACE INC. MAY OTHERWISE AGREE IN WRITING.

UNLESS OTHERWISE SPECIFIED DIMENSIONS ARE IN INCHES. DO NOT SCALE.

TOLERANCES		
2 PLACE	3 PLACE	ANGLES
± .01	± .005	± .5°

MATERIAL

FINISH

PACE® PACE, Incorporated
9893 Brewers Court
Laurel, MD 20723, U.S.A.
TEL (301) 490-9860 FAX (301) 604-2160
Systems for Development, Production, and Repair of Electronic Assemblies

RECEPTACLE ASSEMBLY

F.S.C.M. NO.	DWG. NO.
17794	R1207-0270

REF. SCALE 2/1 | SK | SHEET 1 OF 1

CAD 1 INC. 301-565-3340 567825

PACE INCORPORATED

PROPRIETARY PARTS LIST

The data in this proposal shall not be used or disclosed, except for evaluation purposes, provided that if a contract is awarded to this submitter as a result of or in connection with the submission of this proposal, the Government shall have the right to use or disclose this technical data to the extent provided in the contract. This restriction does not limit the Government's right to use or disclose any technical data which is not proprietary to the submitter or is obtained from another source without restriction.

DWG. NO: R3008-0056 REV: A EC NO: 3759 DATE: 3/4/94 APP: M

AMENDED P/L FORMAT: 8/23/94

TITLE: WIRE HARNESS, CHASSIS, PPS 400

INDEX	REFERENCE NO.	PART NO.	DESCRIPTION	FSCM	QTY
REF	1A1W1	3008-0056	WIRE HARNESS, CHASSIS, PPS 400	17794	REF

REVISIONS				
LEVEL	AUTHORIZATION	DES ENG SIGN	MFG ENG SIGN	RELEASE APPROVAL INITIALS/DATE
A	EC 3759	G.CARDINO	M.FANT	03/01/84

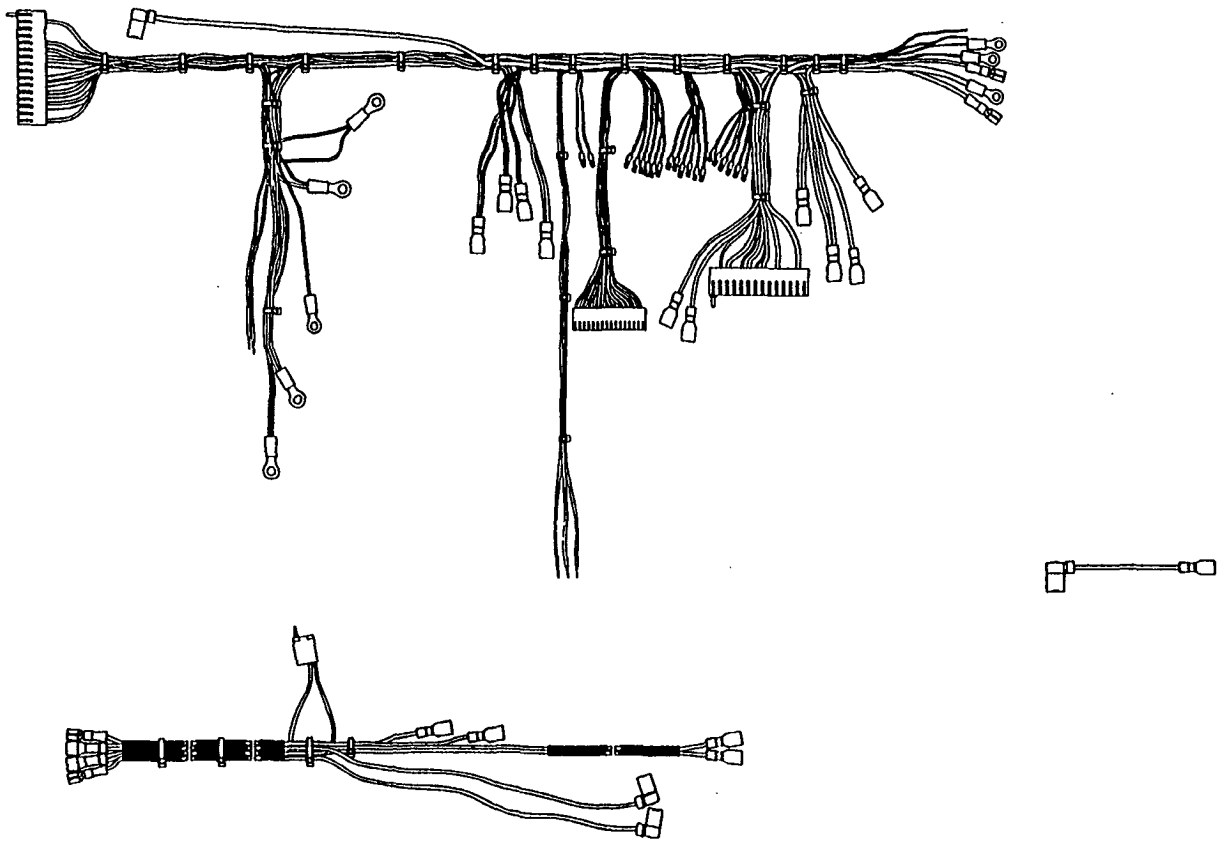

The data in this proposal shall not be used or disclosed, except for evaluation purposes, provided that if a contract is awarded to this submitter as a result of or in connection with the submission of this proposal, the Government shall have the right to use or disclose this technical data to the extent provided in the contract. This restriction does not limit the Government's right to use or disclose any technical data which is not proprietary to the submitter or is obtained from another source without restriction.

PROPRIETARY SOURCE CONTROL DRAWING

This DRAWING CONTAINS INFORMATION PROPRIETARY TO PACE INC. ANY REPRODUCTION, DISCLOSURE OR USE OF THIS DRAWING IS EXPRESSLY PROHIBITED EXCEPT AS PACE INC. MAY OTHERWISE AGREE IN WRITING.

PACE

UNLESS OTHERWISE SPECIFIED DIMENSIONS ARE IN INCHES. DO NOT SCALE.

TOLERANCES		
2 PLACE	3 PLACE	ANGLES
±.01	±.005	±.5°

MATERIAL

FINISH

WIRE HARNESS
CHASSIS, PPS-400

F.S.C.M. NO.	DWG. NO.
17794	R3008-0056

REF SCALE 1/2 | SK | SHEET 1 OF 1

A667 1A1W1 3008-0056

PACE® INCORPORATED

PROPRIETARY PARTS LIST

The data in this proposal shall not be used or disclosed, except for evaluation purposes, provided that if a contract is awarded to this submitter as a result of or in connection with the submission of this proposal, the Government shall have the right to use or disclose this technical data to the extent provided in the contract. This restriction does not limit the Government's right to use or disclose any technical data which is not proprietary to the submitter or is obtained from another source without restriction.

DWG. NO: R3008-0057 REV: A EC NO: 3759 DATE: 3/4/94 APP:

AMENDED P/L FORMAT: 8/23/94

TITLE: WIRING HARNESS, FT. PANEL, PPS 400

INDEX	REFERENCE NO.	PART NO.	DESCRIPTION	FSCM	QTY
REF	1A1W2	3008-0057	WIRING HARNESS, FT. PANEL, PPS 400	17794	REF

REVISIONS				
LEVEL	AUTHORIZATION	DES ENG INITIAL	MFG ENG INITIAL	RELEASE APPROVAL SIGNOFF
A	EC J759	E.CARDINO	M.PANY	03/04/88

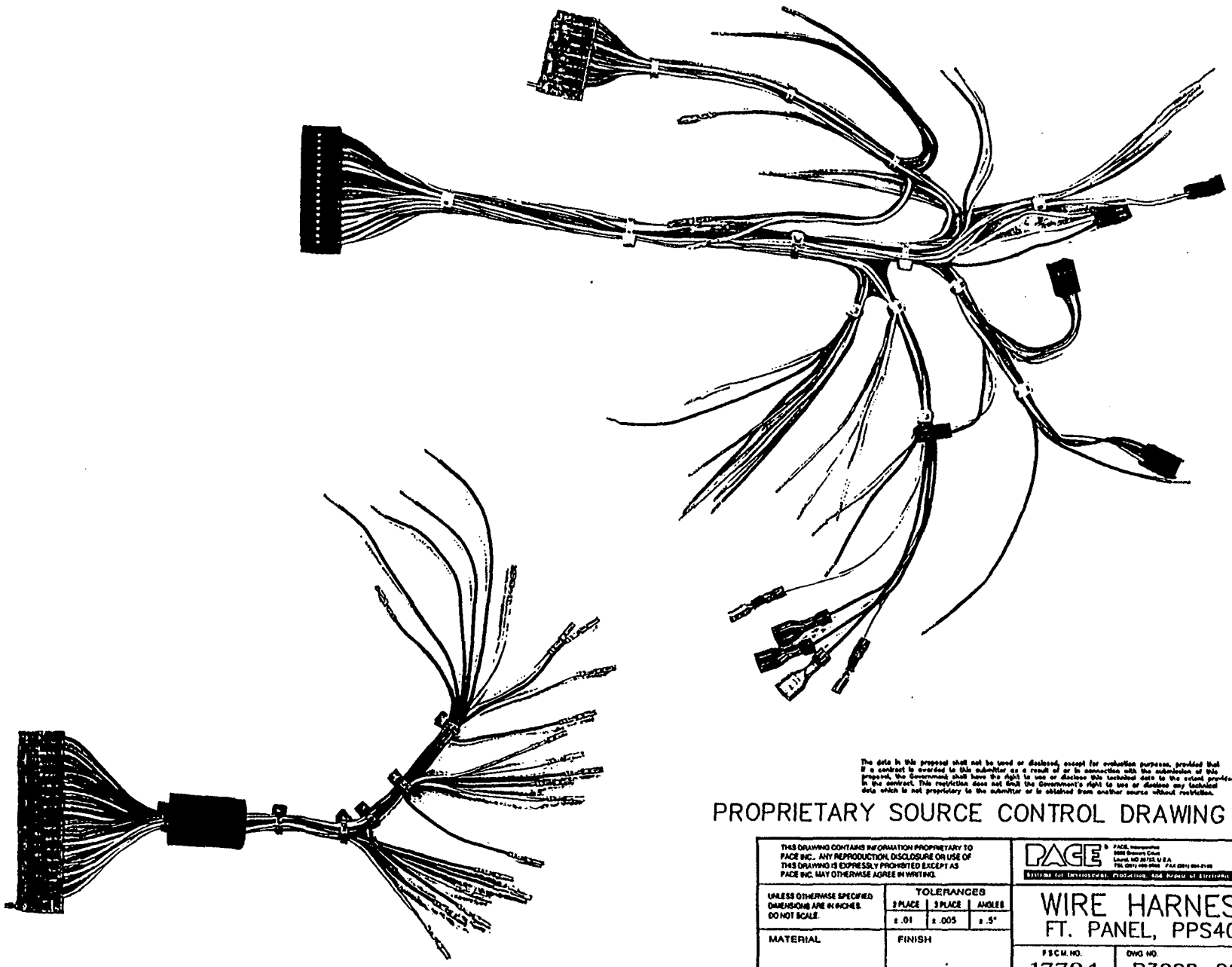

The data in this proposal shall not be used or disclosed, except for evaluation purposes, provided that if a contract is awarded to this submitter as a result of or in connection with the submission of this proposal, the Government shall have the right to use or disclose this technical data to the extent provided in the contract. This restriction does not limit the Government's right to use or disclose any technical data which is not proprietary to the submitter or is obtained from another source without restriction.

PROPRIETARY SOURCE CONTROL DRAWING

THIS DRAWING CONTAINS INFORMATION PROPRIETARY TO PACE INC. ANY REPRODUCTION, DISCLOSURE OR USE OF THIS DRAWING IS EXPRESSLY PROHIBITED EXCEPT AS PACE INC. MAY OTHERWISE AGREE IN WRITING.

PACE® PACE, Incorporated 5000 Bowie Road Laurel, MD 20723, U.S.A. TEL (301) 498-2900 FAX (301) 604-0148

Systems for Development, Production, and Repair of Electronic Assemblies

UNLESS OTHERWISE SPECIFIED DIMENSIONS ARE IN INCHES. DO NOT SCALE.

TOLERANCES		
2 PLACE	3 PLACE	ANGLES
± .01	± .005	± .5°

MATERIAL

FINISH

WIRE HARNESS
FT. PANEL, PPS400

FSCM NO.	DWG NO.
17794	R3008-0057

REF. SCALE 1/L | SK | SHEET 1 OF 1

A668 3A1W2 3008-0057

DWG NO.

PACE INCORPORATED

PROPRIETARY PARTS LIST

The data in this proposal shall not be used or disclosed, except for evaluation purposes, provided that if a contract is awarded to this submitter as a result of or in connection with the submission of this proposal, the Government shall have the right to use or disclose this technical data to the extent provided in the contract. This restriction does not limit the Government's right to use or disclose any technical data which is not proprietary to the submitter or is obtained from another source without restriction.

DWG. NO: R3008-0063 REV: A EC NO: 3759 DATE: 3/4/94 APP: M

AMENDED P/L FORMAT: 8/23/94

TITLE: HARNESS, JUMPER

INDEX	REFERENCE NO.	PART NO.	DESCRIPTION	FSCM	QTY
REF	1A1W3	3008-0063	HARNESS, JUMPER	17794	REF

DWG NO. A R3008-0063 A

REVISIONS				
LEVEL	AUTHORIZATION	DES. ENG. INITIAL	MFG. ENG. INITIAL	RELEASE APPROVAL INITIAL/DATE
A	EC 3759	CC	MF	2/4/94

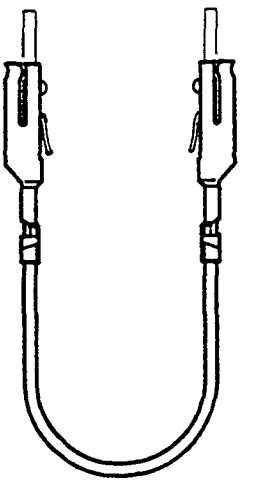

The data in this proposal shall not be used or disclosed, except for evaluation purposes, provided that if a contract is awarded to this submitter as a result of or in connection with the submission of this proposal, the Government shall have the right to use or disclose this technical data to the extent provided in the contract. This restriction does not limit the Government's right to use or disclose any technical data which is not proprietary to the submitter or is obtained from another source without restriction.

PROPRIETARY SOURCE CONTROL DRAWING

THIS DRAWING CONTAINS INFORMATION PROPRIETARY TO PACE INC.. ANY REPRODUCTION, DISCLOSURE OR USE OF THIS DRAWING IS EXPRESSLY PROHIBITED EXCEPT AS PACE INC. MAY OTHERWISE AGREE IN WRITING.

PACE®
PACE, Incorporated
9693 Brewers Court
Laurel, MD 20723, U.S.A.
TEL (301) 490-0860 FAX (301) 604-2160
Systems for Development, Production, and Repair of Electronic Assemblies

UNLESS OTHERWISE SPECIFIED DIMENSIONS ARE IN INCHES. DO NOT SCALE.

TOLERANCES		
2 PLACE	3 PLACE	ANGLES
± .01	± .005	± .5°

MATERIAL

FINISH

HARNESS JUMPER

F.S.C.M. NO.	DWG. NO.
17794	R3008-0063

REF. SCALE 1/1 | SK | SHEET 1 OF 1

CAD 1 INC. 301-565-3340 567825

1A1W3 3008-0063

PACE INCORPORATED

PROPRIETARY PARTS LIST

The data in this proposal shall not be used or disclosed, except for evaluation purposes, provided that if a contract is awarded to this submitter as a result of or in connection with the submission of this proposal, the Government shall have the right to use or disclose this technical data to the extent provided in the contract. This restriction does not limit the Government's right to use or disclose any technical data which is not proprietary to the submitter or is obtained from another source without restriction.

DWG. NO: R6021-0006 REV: A EC NO: 3759 DATE: 3/4/94 APP:

AMENDED P/L FORMAT: 8/23/94

TITLE: CLEANING STATION, SMT

INDEX	REFERENCE NO.	PART NO.	DESCRIPTION	FSCM	QTY
REF	1A2	6021-0006	CLEANING STATION, SMT	17794	REF
1	1A2H1	1405-0633	SCREW, PAN HD, #6-32X2.75"LG.	17794	1
		GENERIC		ZZZ	
2	1A2H2	1410-0093	NUT, THUMB, #6-32	17794	1
		GENERIC		ZZZ	
3	1A2MP1	4021-0007-P7	SPONGE, DISH	17794	1
4	1A2MP2	1100-0232	TOOL, CLEANING, FIBER	17794	1
5	1A2MP3	1100-0233	TOOL, CLEANING, SPONGE	17794	1
6	1A2MP4	1321-0230	STAND, CLEANING STATION	17794	1
7	1A2MP5	1321-0229	DISH, CLEANING STATION	17794	1
8	1A2MP6	1317-0025	PAD, NEOPRENE,.5"X.5"X .12"	17794	4
9	1A2MP7	1317-0026	PAD, NEOPRENE, 2"X 2"X .06"	17794	1
10		5050-0285	INST. SHEET, CLEANING STATION	17794	1

DWG NO. B R6021-0006 | A

REVISIONS				
LEVEL	AUTHORIZATION	DES. ENG. INITIAL	MFG. ENG. INITIAL	RELEASE APPROVAL INITIAL/DATE
A	EC 3759	C.CARDNO	M.PANT	03/04/94

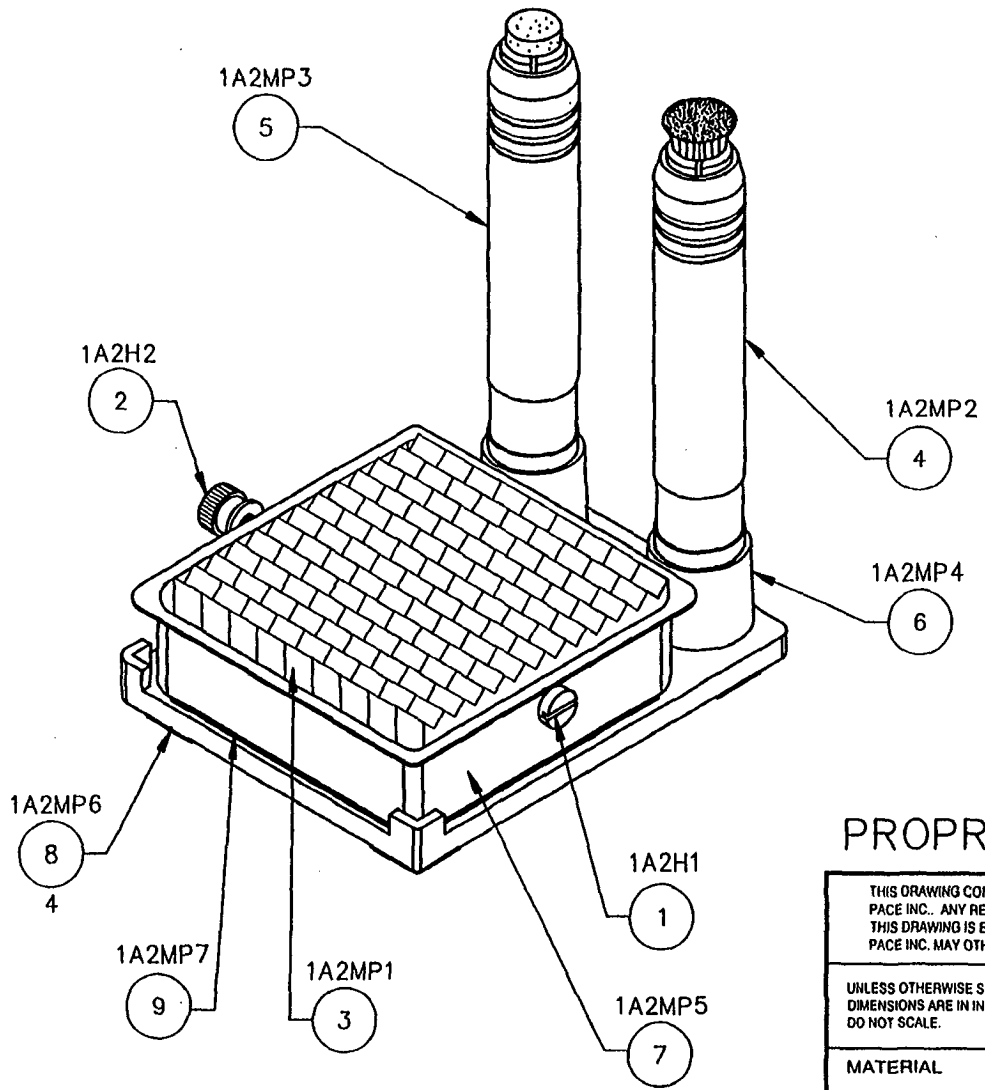

The data in this proposal shall not be used or disclosed, except for evaluation purposes, provided that if a contract is awarded to this submitter as a result of or in connection with the submission of this proposal, the Government shall have the right to use or disclose this technical data to the extent provided in the contract. This restriction does not limit the Government's right to use or disclose any technical data which is not proprietary to the submitter or is obtained from another source without restriction.

PROPRIETARY ASSEMBLY DRAWING

THIS DRAWING CONTAINS INFORMATION PROPRIETARY TO PACE INC.. ANY REPRODUCTION, DISCLOSURE OR USE OF THIS DRAWING IS EXPRESSLY PROHIBITED EXCEPT AS PACE INC. MAY OTHERWISE AGREE IN WRITING.

PACE
PACE, Incorporated
9850 Brewers Court
Laurel, MD 20723, U.S.A.
TEL (301) 490 9660 FAX (301) 604-2150
Systems for Development, Production, and Repair of Electronic Assemblies

UNLESS OTHERWISE SPECIFIED DIMENSIONS ARE IN INCHES. DO NOT SCALE.

TOLERANCES		
2 PLACE	3 PLACE	ANGLES
± .01	± .005	± .5°

MATERIAL

FINISH

CLEANING STATION SMT

F.S.C.M. NO.	DWG. NO.
17794	R6021-0006

REF. SCALE 1/1 | SK | SHEET 1 OF 1

1A2 6021-0006

CAD 1 INC. 301-585-3340 567825

PACE® INCORPORATED

PROPRIETARY PARTS LIST

The data in this proposal shall not be used or disclosed, except for evaluation purposes, provided that if a contract is awarded to this submitter as a result of or in connection with the submission of this proposal, the Government shall have the right to use or disclose this technical data to the extent provided in the contract. This restriction does not limit the Government's right to use or disclose any technical data which is not proprietary to the submitter or is obtained from another source without restriction.

DWG. NO: R1100-0232 REV: A EC NO: 3759 DATE: 3/4/94 APP:

AMENDED P/L FORMAT: 8/23/94

TITLE: TOOL, CLEANING, FIBER

INDEX	REFERENCE NO.	PART NO.	DESCRIPTION	FSCM	QTY
REF	1A2MP2	1100-0232	TOOL, CLEANING, FIBER	17794	REF
1	1A2MP2MP1	1127-0013	BRUSH, FIBER	17794	1
2	1A2MP2MP2	1119-0063	HANDLE	17794	1

DWG NO. A R1100-0232 A

REVISIONS				
LEVEL	AUTHORIZATION	DES. ENG. INITIAL	MFG. ENG. INITIAL	RELEASE APPROVAL INITIAL/DATE
A	EC 3759	C. CARDNO	M. PANT	3/4/94

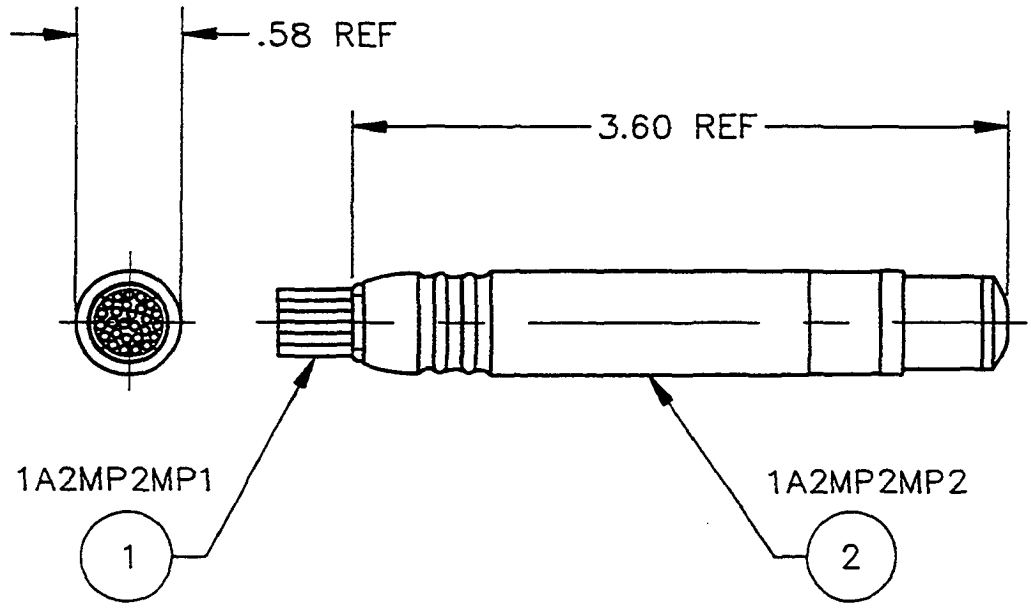

The data in this proposal shall not be used or disclosed, except for evaluation purposes, provided that if a contract is awarded to this submitter as a result of or in connection with the submission of this proposal, the Government shall have the right to use or disclose this technical data to the extent provided in the contract. This restriction does not limit the Government's right to use or disclose any technical data which is not proprietary to the submitter or is obtained from another source without restriction.

PROPRIETARY ASSEMBLY DRAWING

THIS DRAWING CONTAINS INFORMATION PROPRIETARY TO PACE INC.. ANY REPRODUCTION, DISCLOSURE OR USE OF THIS DRAWING IS EXPRESSLY PROHIBITED EXCEPT AS PACE INC. MAY OTHERWISE AGREE IN WRITING.

PACE ©
PACE, Incorporated
9693 Brewers Court
Laurel, MD 20723, U.S.A.
TEL (301) 490-9860 FAX (301) 604-2160
Systems for Development, Production, and Repair of Electronic Assemblies

UNLESS OTHERWISE SPECIFIED DIMENSIONS ARE IN INCHES. DO NOT SCALE.

TOLERANCES		
2 PLACE	3 PLACE	ANGLES
± .01	± .005	± .5°

MATERIAL: –

FINISH: –

TOOL, CLEANING FIBER

F.S.C.M. NO.	DWG. NO.
17794	R1100–0232

REF. SCALE 1/1 | SK – | SHEET 1 OF 1

CAD 1 INC. 301-565-3340 567825

1A2MP2 1100-0232

PACE® INCORPORATED

PROPRIETARY PARTS LIST

The data in this proposal shall not be used or disclosed, except for evaluation purposes, provided that if a contract is awarded to this submitter as a result of or in connection with the submission of this proposal, the Government shall have the right to use or disclose this technical data to the extent provided in the contract. This restriction does not limit the Government's right to use or disclose any technical data which is not proprietary to the submitter or is obtained from another source without restriction.

DWG. NO: R1100-0233 REV: A EC NO: 3759 DATE: 3/4/94 APP: M

AMENDED P/L FORMAT: 8/23/94

TITLE: TOOL, CLEANING, SPONGE

INDEX	REFERENCE NO.	PART NO.	DESCRIPTION	FSCM	QTY
REF	1A2MP3	1100-0233	TOOL, CLEANING, SPONGE	17794	REF
1	1A2MP3MP1	4021-0006	SPONGE	17794	1
2	1A2MP3MP2	1119-0063	HANDLE	17794	1

DWG NO. A R1100-0233 A

REVISIONS				
LEVEL	AUTHORIZATION	DES. ENG. INITIAL	MFG. ENG. INITIAL	RELEASE APPROVAL INITIAL/DATE
A	EC 3759	C. CARDNO	M. PANT	3/4/94

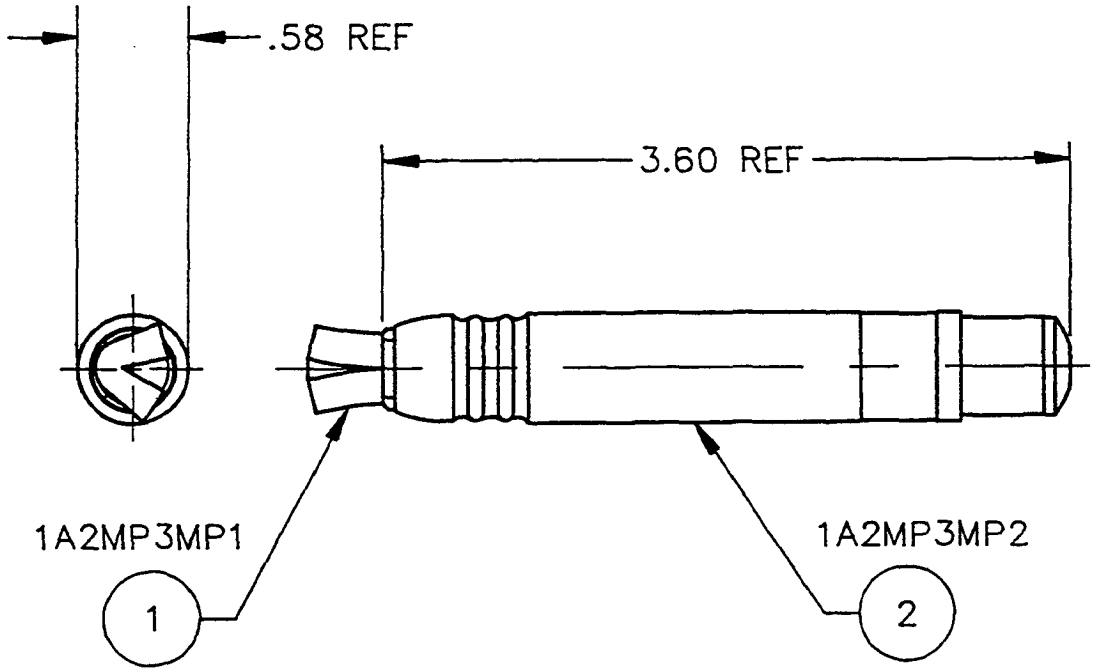

The data in this proposal shall not be used or disclosed, except for evaluation purposes, provided that if a contract is awarded to this submitter as a result of or in connection with the submission of this proposal, the Government shall have the right to use or disclose this technical data to the extent provided in the contract. This restriction does not limit the Government's right to use or disclose any technical data which is not proprietary to the submitter or is obtained from another source without restriction.

PROPRIETARY ASSEMBLY DRAWING

THIS DRAWING CONTAINS INFORMATION PROPRIETARY TO PACE INC.. ANY REPRODUCTION, DISCLOSURE OR USE OF THIS DRAWING IS EXPRESSLY PROHIBITED EXCEPT AS PACE INC. MAY OTHERWISE AGREE IN WRITING.

PACE®
PACE, Incorporated
9693 Brewers Court
Laurel, MD 20723, U.S.A.
TEL (301) 490-9660 FAX (301) 604-2160
Systems for Development, Production, and Repair of Electronic Assemblies

UNLESS OTHERWISE SPECIFIED DIMENSIONS ARE IN INCHES. DO NOT SCALE.

TOLERANCES		
2 PLACE	3 PLACE	ANGLES
± .01	± .005	± .5°

MATERIAL: —

FINISH: —

TOOL, CLEANING SPONGE

F.S.C.M. NO.	DWG. NO.
17794	R1100-0233

REF. SCALE 1/1 | SK — | SHEET 1 OF 1

CAD 1 INC. 301-565-3340 567825

1A2MP3 1100-0233

PACE® INCORPORATED

PROPRIETARY PARTS LIST

The data in this proposal shall not be used or disclosed, except for evaluation purposes, provided that if a contract is awarded to this submitter as a result of or in connection with the submission of this proposal, the Government shall have the right to use or disclose this technical data to the extent provided in the contract. This restriction does not limit the Government's right to use or disclose any technical data which is not proprietary to the submitter or is obtained from another source without restriction.

DWG. NO: R6008-0115 REV: A EC NO: 3759 DATE: 3/4/94 APP:

AMENDED P/L FORMAT: 8/23/94

TITLE: FOOT PEDAL, TREADLINE

INDEX	REFERENCE NO.	PART NO.	DESCRIPTION	FSCM	QTY
REF	1A3	6008-0115	FOOT PEDAL, TREADLINE	17794	REF

REVISIONS				
LEVEL	AUTHORIZATION	DES. ENG. INITIAL	MFG. ENG. INITIAL	RELEASE APPROVAL INITIAL/DATE
A	EC 3759	C. CARDNO	M. PANT	3/4/94

DWG NO. A

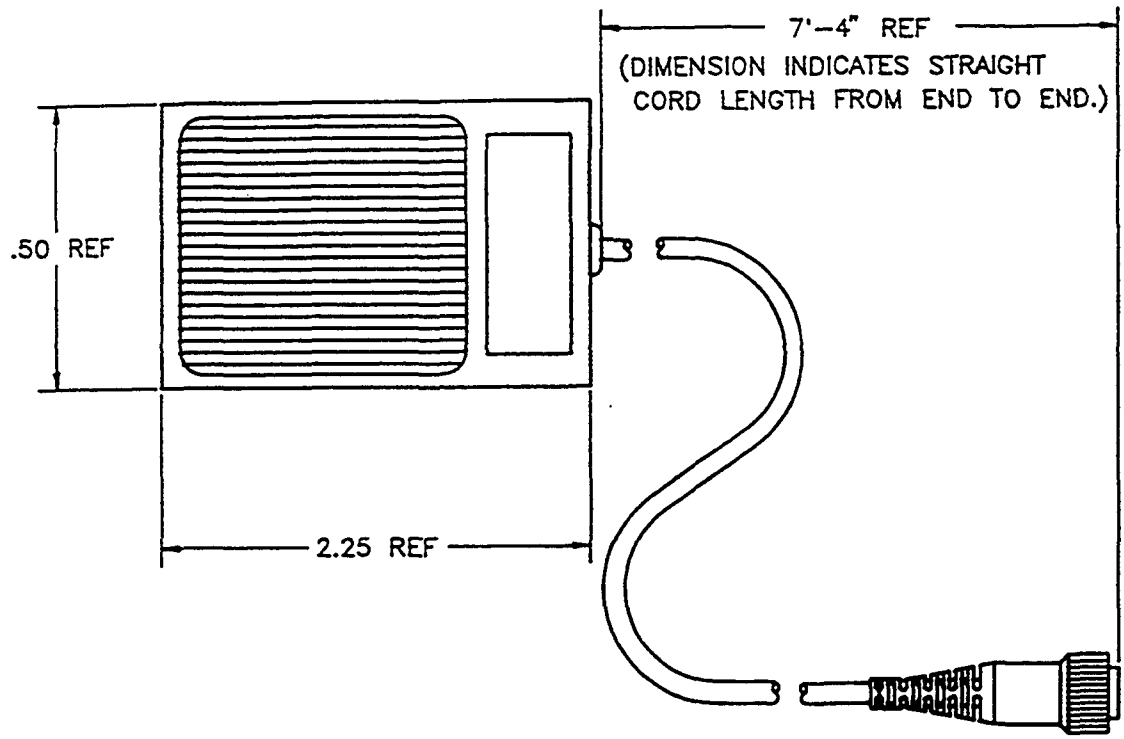

The data in this proposal shall not be used or disclosed, except for evaluation purposes, provided that if a contract is awarded to this submitter as a result of or in connection with the submission of this proposal, the Government shall have the right to use or disclose this technical data to the extent provided in the contract. This restriction does not limit the Government's right to use or disclose any technical data which is not proprietary to the submitter or is obtained from another source without restriction.

PROPRIETARY SOURCE CONTROL DRAWING

THIS DRAWING CONTAINS INFORMATION PROPRIETARY TO PACE INC.. ANY REPRODUCTION, DISCLOSURE OR USE OF THIS DRAWING IS EXPRESSLY PROHIBITED EXCEPT AS PACE INC. MAY OTHERWISE AGREE IN WRITING.

PACE®
PACE, Incorporated
6880 Brewers Court
Laurel, MD 20723, U.S.A.
TEL (301) 490-6880 FAX (301) 604-2160
Systems for Development, Production, and Repair of Electronic Assemblies

UNLESS OTHERWISE SPECIFIED DIMENSIONS ARE IN INCHES. DO NOT SCALE.

TOLERANCES		
2 PLACE	3 PLACE	ANGLES
± .01	± .005	± .5°

MATERIAL: COMMERCIAL

FINISH: NONE

FOOT PEDAL
TREADLINE

F.S.C.M. NO.	DWG. NO.
17794	R6008-0115

REF. SCALE —	SK —	SHEET 1 OF 1

PACE INCORPORATED

PROPRIETARY PARTS LIST

The data in this proposal shall not be used or disclosed, except for evaluation purposes, provided that if a contract is awarded to this submitter as a result of or in connection with the submission of this proposal, the Government shall have the right to use or disclose this technical data to the extent provided in the contract. This restriction does not limit the Government's right to use or disclose any technical data which is not proprietary to the submitter or is obtained from another source without restriction.

DWG. NO: R6910-0077

REV: A EC NO: 3759 DATE: 3/4/94

AMENDED P/L FORMAT: 8/23/94

B EC NO: 4366 DATE: 5/21/96

APP:

TITLE: EXTRACTOR, SOLDER, SX-70 W/ACCESSORIES

INDEX	REFERENCE NO.	PART NO.	DESCRIPTION	FSCM	QTY
REF	1A4	6910-0077	EXTRACTOR, SOLDER, SX-70 W/ACCESSORIES	17794	REF
1	1A4A1	6010-0077	EXTRACTOR, SOLDER, SX-70	17794	1
2	1A4A2	1309-0028	VISIFILTER II	17794	1
3	1A4MP1	1342-0015-08	TUBING, SILICONE, BLACK, .125 ID, 54" LG.	17794	1
		MS 70E00B		ZZZ	
4	1A4MP2	1325-0003-07	TUBING, PVC, CLEAR, .125 ID, 1" LG.	17794	2
5	1A4MP3	1259-0087	DISCONNECT, QUICK CHANGE HOSE MT., MALE	17794	2
6	1A4MP4	1259-0086	DISCONNECT, QUICK CHANGE HOSE MT., FEMALE	17794	1
7	1A4MP5	1211-0036	CLAMP, HOSE, REUSABLE	17794	1
		5000-2		90526	
8	1A4MP6	1321-0085-01	HOLDER, WIRE TO TUBE	17794	6
9	1A4MP7	1360-0083-P1	ADAPTER, TIP, 1/8" TIP, 3/16" SHANK	17794	1
10	1A4MP8	1127-0002	BRUSH, BRISTLE, TUBE CLEANING	17794	1
11	1A4MP9	1100-0206	TOOL, TIP	17794	1
12	1A4MP10	1127-0015	CLEANER, TIP, .021 DIA.	17794	1
13	1A4MP11	1127-0016	CLEANER, TIP, .033 DIA.	17794	1
14	1A4MP12	1127-0017	CLEANER, TIP, .053 DIA.	17794	1
15	1A4MP13	1127-0014	BRUSH, WIRE, 3/16" DIA., 6" LG.	17794	1
16	1A4MP14	1127-0006	BRUSH, WIRE, 1/8" DIA., 6" LG	17794	1
17	1A4MP15	1121-0342	TIP,SX,3/16 SHK,.040 ID	17794	1
18	1A4MP16	1121-0369	TIP, SX, FLO, 3/16" SHANK, 3/16" HEAD	17794	1
19	1A4MP17	1121-0367	TIP, SX, 3/16" SHANK, .030 ID	17794	1
20	1A4MP18	1121-0368	TIP, SX, 3/16" SHANK, .060 ID	17794	1
21	1A4MP19	1121-0262	TIP, SX, MICRO, BENT, .040 ID	17794	1
22	1A4MP20	6993-0136	KIT, CABLE MARKERS, C TYPE	17794	1

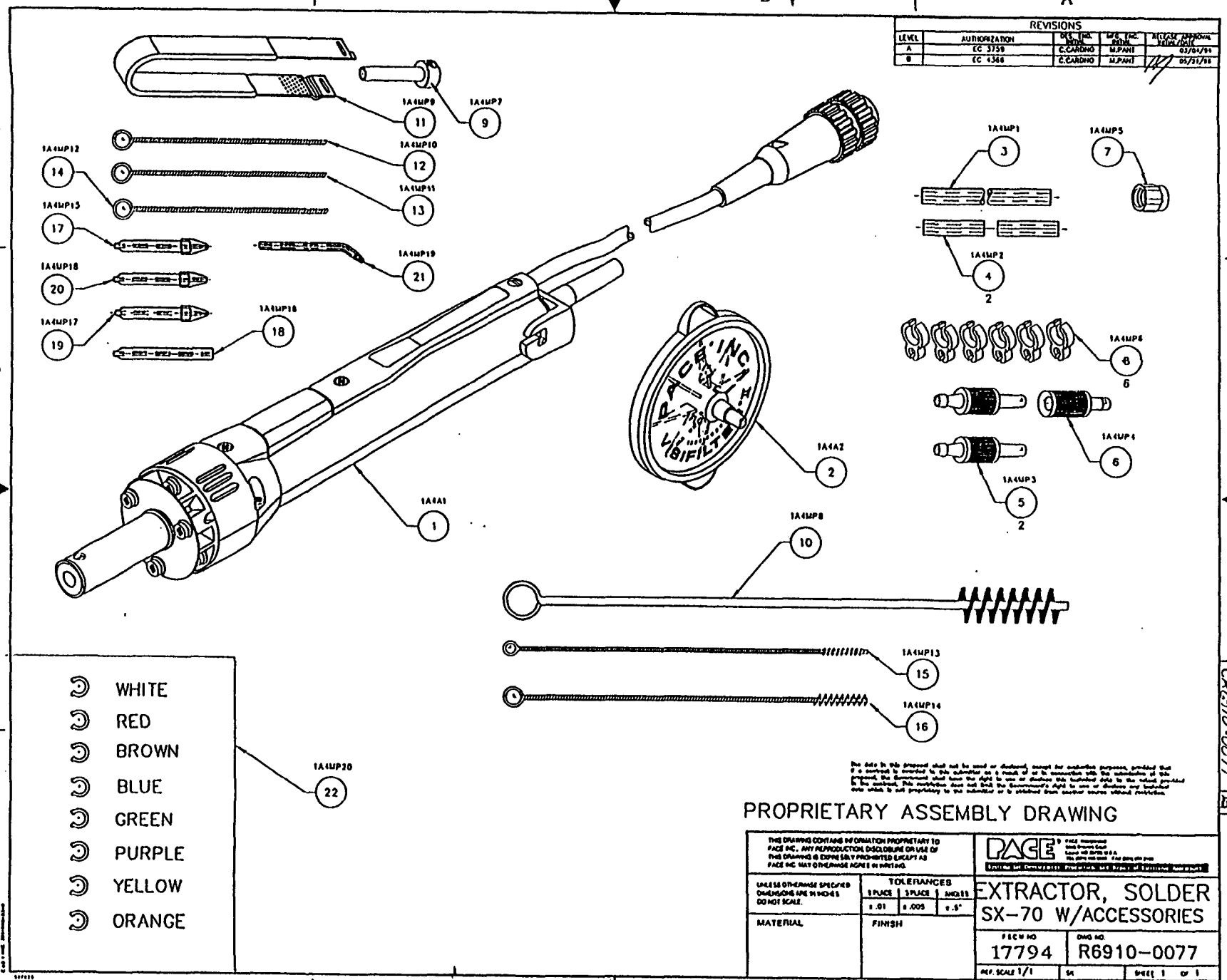
REVISIONS
LEVEL | AUTHORIZATION | DES. ENG. INIT. | MFG. ENG. INIT. | RELEASE APPROVAL INIT./DATE
A | EC 3759 | C.CARDNO | M.PANT | 03/04/94
B | EC 4366 | C.CARDNO | M.PANT | 05/31/96
1A4MP9
11
1A4MP7
9
1A4MP12
14
1A4MP10
12
1A4MP11
13
1A4MP13
17
1A4MP19
21
1A4MP18
20
1A4MP17
19
1A4MP16
18
1A4A1
1
1A4A2
2
1A4MP1
3
1A4MP5
7
1A4MP2
4
2
1A4MP6
8
6
1A4MP4
6
1A4MP3
5
2
1A4MP8
10
1A4MP13
15
1A4MP14
16
1A4MP20
22
WHITE
RED
BROWN
BLUE
GREEN
PURPLE
YELLOW
ORANGE
PROPRIETARY ASSEMBLY DRAWING
THIS DRAWING CONTAINS INFORMATION PROPRIETARY TO PACE INC. ANY REPRODUCTION, DISCLOSURE OR USE OF THIS DRAWING IS EXPRESSLY PROHIBITED EXCEPT AS PACE INC MAY OTHERWISE AGREE IN WRITING.
UNLESS OTHERWISE SPECIFIED DIMENSIONS ARE IN INCHES DO NOT SCALE.
TOLERANCES
1 PLACE ± .01
3 PLACE ± .005
ANGLES ± .5°
MATERIAL
FINISH
PACE
EXTRACTOR, SOLDER
SX-70 W/ACCESSORIES
PECM NO
17794
DWG NO.
R6910-0077
REF. SCALE 1/1
SHEET 1 OF 1
1A4
6910-0077
D
C
B
A
4
3
2
1

PAGE® INCORPORATED

PROPRIETARY PARTS LIST

The data in this proposal shall not be used or disclosed, except for evaluation purposes, provided that if a contract is awarded to this submitter as a result of or in connection with the submission of this proposal, the Government shall have the right to use or disclose this technical data to the extent provided in the contract. This restriction does not limit the Government's right to use or disclose any technical data which is not proprietary to the submitter or is obtained from another source without restriction.

DWG. NO: R6010-0077 REV: A EC NO: 3759 DATE: 3/4/94 APP: M

AMENDED P/L FORMAT: 8/23/94

TITLE: EXTRACTOR, SOLDER, SX-70

INDEX	REFERENCE NO.	PART NO.	DESCRIPTION	FSCM	QTY
REF	1A4A1	6010-0077	EXTRACTOR, SOLDER, SX-70	17794	REF
1	1A4A1A1	6010-0080	HEATER ASSY, SX-70	17794	1
2	1A4A1A2	4010-0101	REAR SEAL ASSY	17794	1
3	1A4A1H1	1405-0527 GENERIC	SCREW, #2-28 X 7/16" LG. FLAT HD.PHIL.	17794 ZZZ	2
4	1A4A1H2	1405-0395 GENERIC	SCREW, #4-40 X 1/4" LG. PAN HD. W/LOCKWASHER	17794 ZZZ	3
5	1A4A1H3	1348-0197 GENERIC	SCREW, #2-28 X 9/32" LG. FIL. HD. PHIL.	17794 ZZZ	2
6	1A4A1H4	1405-0342 GENERIC	SCREW, SET, WHITE NYLON #8-32 X 1/8" LG.	17794 ZZZ	1
7	1A4A1H5	1405-0534 GENERIC	SCREW, #4-40 X 5/16" LG. PAN HD. W/LOCKWASHER	17794 ZZZ	3
8	1A4A1MP1	1313-0115	GUIDE COVER, PCB COVER	17794	1
9	1A4A1MP2	1309-0018	FILTER	17794	1
10	1A4A1MP3	4010-0033	BAFFLE, S	17794	1
11	1A4A1MP4	1265-0009	GLASS CHAMBER	17794	1
12	1A4A1MP5	1209-0006	CLIP, SPRING	17794	2
13	1A4A1MP6	1119-0047	HANDLE, BOTTOM HALF	17794	1
14	1A4A1MP7	1119-0048	HANDLE, TOP HALF	17794	1
15	1A4A1MP8	1119-0064	BUTTON, EXTRACTOR	17794	1
16	1A4A1MP9	1360-0005	DISSIPATOR	17794	1
17	1A4A1MP10	1351-0496	LABEL, SODR-X-TRACTOR	17794	1
18	1A4A1W1	4010-0098	CORD/SWITCH ASSY	17794	1

REVISIONS				
LEVEL	AUTHORIZATION	DES END INITIAL	WG END INITIAL	RELEASE/REMOVAL INITIAL DATE
A	EC J759	C.CARONO	U.PANT	03/01/94

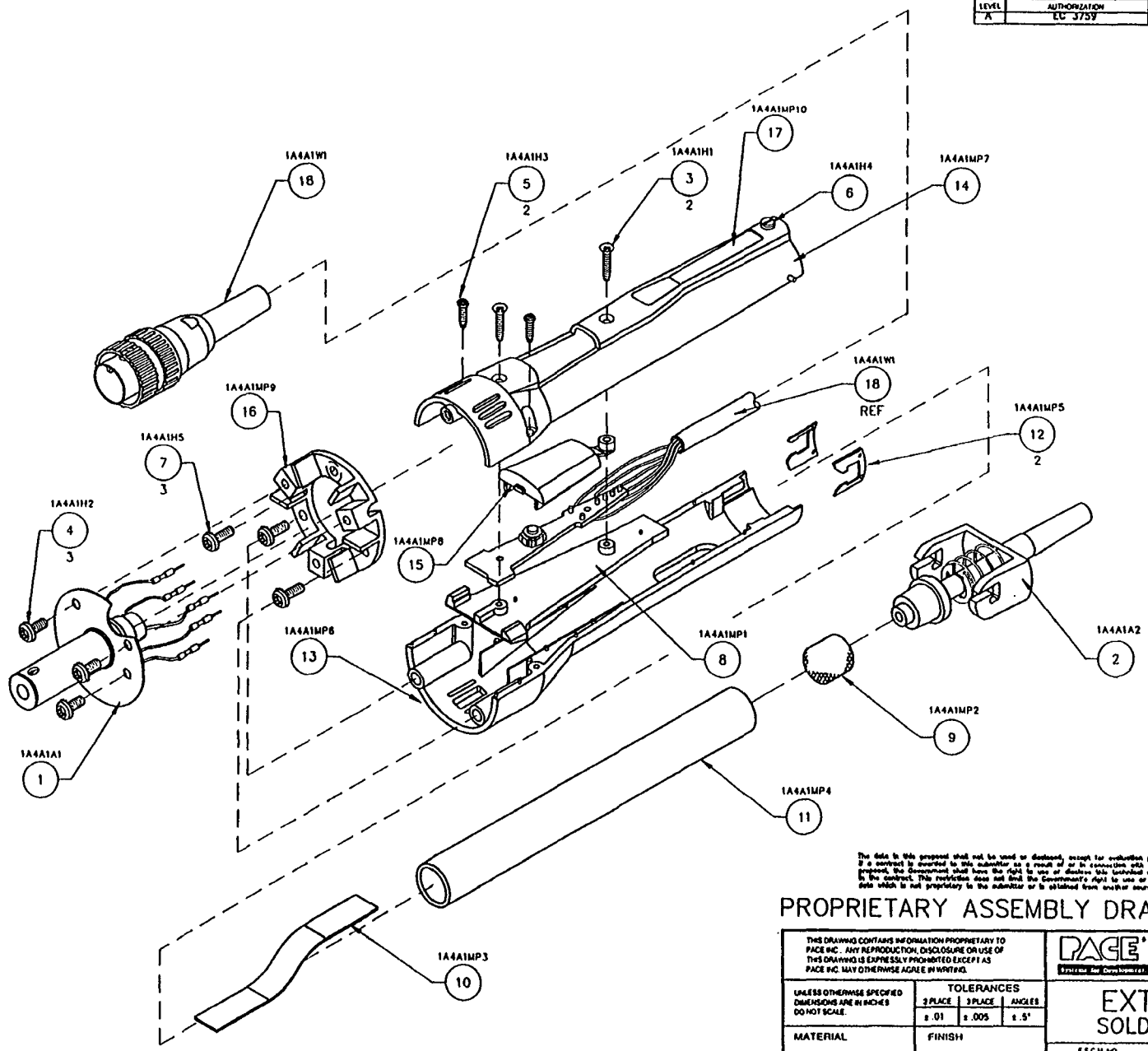

The data in this proposal shall not be used or disclosed, except for evaluation purposes, provided that if a contract is awarded to the submitter as a result of or in connection with the submission of this proposal, the Government shall have the right to use or disclose the technical data to the extent provided in the contract. This restriction does not limit the Government's right to use or disclose any technical data which is not proprietary to the submitter or is obtained from another source without restriction.

PROPRIETARY ASSEMBLY DRAWING

THIS DRAWING CONTAINS INFORMATION PROPRIETARY TO PACE INC. ANY REPRODUCTION, DISCLOSURE OR USE OF THIS DRAWING IS EXPRESSLY PROHIBITED EXCEPT AS PACE INC. MAY OTHERWISE AGREE IN WRITING.

PACE

UNLESS OTHERWISE SPECIFIED DIMENSIONS ARE IN INCHES DO NOT SCALE.	TOLERANCES 2 PLACE	3 PLACE	ANGLES
	±.01	±.005	±.5°
MATERIAL	FINISH		

EXTRACTOR SOLDER, SX-70

FSCM NO	DWG NO
17794	R6010-0077

REF SCALE 1/1 | SH | SHEET 1 OF 1

1A4A1 6010-0077

DWG NO. C R6010-0077 A

PACE® INCORPORATED

PROPRIETARY PARTS LIST

The data in this proposal shall not be used or disclosed, except for evaluation purposes, provided that if a contract is awarded to this submitter as a result of or in connection with the submission of this proposal, the Government shall have the right to use or disclose this technical data to the extent provided in the contract. This restriction does not limit the Government's right to use or disclose any technical data which is not proprietary to the submitter or is obtained from another source without restriction.

DWG. NO: R6010-0080 REV: A EC NO: 3759 DATE: 3/4/94 APP:

AMENDED P/L FORMAT: 8/23/94

TITLE: HEATER ASSY, SX-70

INDEX	REFERENCE NO.	PART NO.	DESCRIPTION	FSCM	QTY
REF	1A4A1A1	6010-0080	HEATER ASSY, SX-70	17794	REF
1	1A4A1A1H1	1348-0547	SCREW, SET #8-32 X .125" LG.	17794	1
		GENERIC		ZZZ	
2	1A4A1A1MP1	1213-0033	SEAL, FRONT	17794	1

DWG NO.	
B R6010-0080	A

REVISIONS				
LEVEL	AUTHORIZATION	DES. ENG. INITIAL	MFG. ENG. INITIAL	RELEASE APPROVAL INITIAL/DATE
A	EC 3759	C.CARDNO	M.PANT	03/04/94

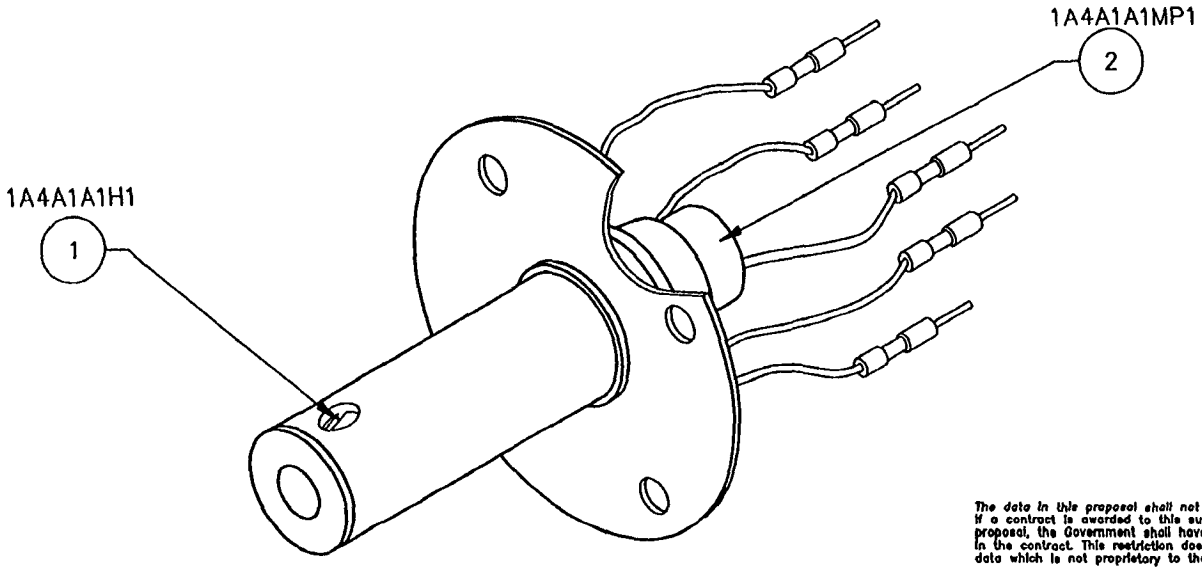

The data in this proposal shall not be used or disclosed, except for evaluation purposes, provided that if a contract is awarded to this submitter as a result of or in connection with the submission of this proposal, the Government shall have the right to use or disclose this technical data to the extent provided in the contract. This restriction does not limit the Government's right to use or disclose any technical data which is not proprietary to the submitter or is obtained from another source without restriction.

PROPRIETARY ASSEMBLY DRAWING

THIS DRAWING CONTAINS INFORMATION PROPRIETARY TO PACE INC.. ANY REPRODUCTION, DISCLOSURE OR USE OF THIS DRAWING IS EXPRESSLY PROHIBITED EXCEPT AS PACE INC. MAY OTHERWISE AGREE IN WRITING.

PACE® PACE, Incorporated
9693 Brewers Court
Laurel, MD 20723, U S A
TEL (301) 490 9660 FAX (301) 604-2160
Systems for Development, Production, and Repair of Electronic Assemblies

UNLESS OTHERWISE SPECIFIED DIMENSIONS ARE IN INCHES. DO NOT SCALE.

TOLERANCES		
2 PLACE	3 PLACE	ANGLES
± .01	± .005	± .5°

MATERIAL

FINISH

HEATER ASSY.
SX-70

F.S.C.M. NO.	DWG. NO.
17794	R6010-0080

REF. SCALE 2/1 | SK | SHEET 1 OF 1

CAD 1 INC. 301-565-5340 587825

1A4A1A1 6010-0080

PAGE® INCORPORATED

PROPRIETARY PARTS LIST

The data in this proposal shall not be used or disclosed, except for evaluation purposes, provided that if a contract is awarded to this submitter as a result of or in connection with the submission of this proposal, the Government shall have the right to use or disclose this technical data to the extent provided in the contract. This restriction does not limit the Government's right to use or disclose any technical data which is not proprietary to the submitter or is obtained from another source without restriction.

DWG. NO: R4010-0101 REV: A EC NO: 3759 DATE: 3/4/94 APP: nl

AMENDED P/L FORMAT: 8/23/94

TITLE: REAR SEAL ASSY

INDEX	REFERENCE NO.	PART NO.	DESCRIPTION	FSCM	QTY
REF	1A4A1A2 1A6A1A2 1A7A1A2	4010-0101	REAR SEAL ASSY	17794	REF
1	1A4A1A2MP1 1A6A1A2MP1 1A7A1A2MP1	1213-0001	SEAL, REAR	17794	1

DWG NO.
B

REVISIONS				
LEVEL	AUTHORIZATION	DES. ENG. INITIAL	MFG. ENG. INITIAL	RELEASE APPROVAL INITIAL/DATE
A	EC 3759	C.CARDNO	M.PANT	03/04/94

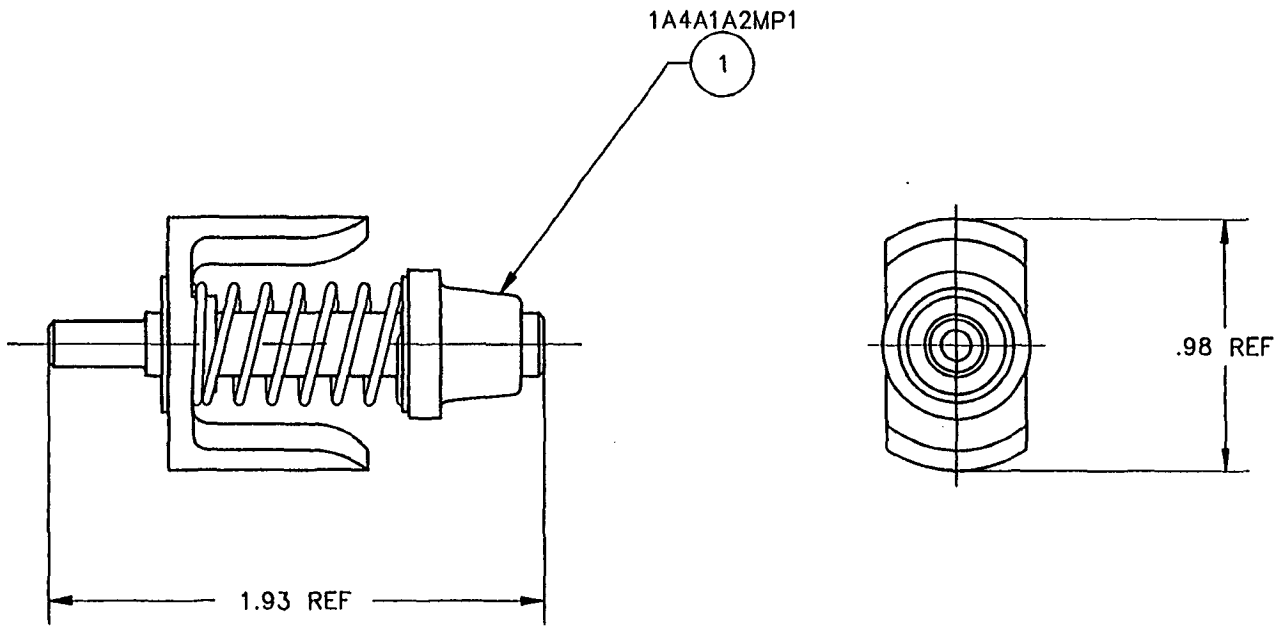

The data in this proposal shall not be used or disclosed, except for evaluation purposes, provided that if a contract is awarded to this submitter as a result of or in connection with the submission of this proposal, the Government shall have the right to use or disclose this technical data to the extent provided in the contract. This restriction does not limit the Government's right to use or disclose any technical data which is not proprietary to the submitter or is obtained from another source without restriction.

PROPRIETARY ASSEMBLY DRAWING

THIS DRAWING CONTAINS INFORMATION PROPRIETARY TO PACE INC.. ANY REPRODUCTION, DISCLOSURE OR USE OF THIS DRAWING IS EXPRESSLY PROHIBITED EXCEPT AS PACE INC. MAY OTHERWISE AGREE IN WRITING.

PACE®
PACE, Incorporated
8693 Brewers Court
Laurel, MD 20723, U.S.A.
TEL (301) 490-9660 FAX (301) 604-2180
Systems for Development, Production, and Repair of Electronic Assemblies

UNLESS OTHERWISE SPECIFIED DIMENSIONS ARE IN INCHES. DO NOT SCALE.

TOLERANCES		
2 PLACE	3 PLACE	ANGLES
± .01	± .005	± .5°

MATERIAL

FINISH

REAR SEAL ASS'Y

F.S.C.M. NO.	DWG. NO.
17794	R4010-0101

REF. SCALE 2/1 | SK | SHEET 1 OF 1

1A4A1A2	4010-0101
1A6A1A2	4010-0101
1A7A1A2	4010-0101

CAD 1 INC. 301-565-3340 567825

PACE® INCORPORATED

PROPRIETARY PARTS LIST

The data in this proposal shall not be used or disclosed, except for evaluation purposes, provided that if a contract is awarded to this submitter as a result of or in connection with the submission of this proposal, the Government shall have the right to use or disclose this technical data to the extent provided in the contract. This restriction does not limit the Government's right to use or disclose any technical data which is not proprietary to the submitter or is obtained from another source without restriction.

DWG. NO: R4010-0098 REV: A EC NO: 3759 DATE: 3/4/94 APP: M

AMENDED P/L FORMAT: 8/23/94

TITLE: CORD/SWITCH ASSY

INDEX	REFERENCE NO.	PART NO.	DESCRIPTION	FSCM	QTY
REF	1A4A1W1 1A6A1W1 1A7A1W1	4010-0098	CORD/SWITCH ASSY	17794	REF

DWG NO. BR4010-0098 | A

REVISIONS				
LEVEL	AUTHORIZATION	DES. ENG. INITIAL	MFG. ENG. INITIAL	RELEASE APPROVAL INITIAL/DATE
A	EC 3759	C. CARDNO	M. PANT	3/4/94

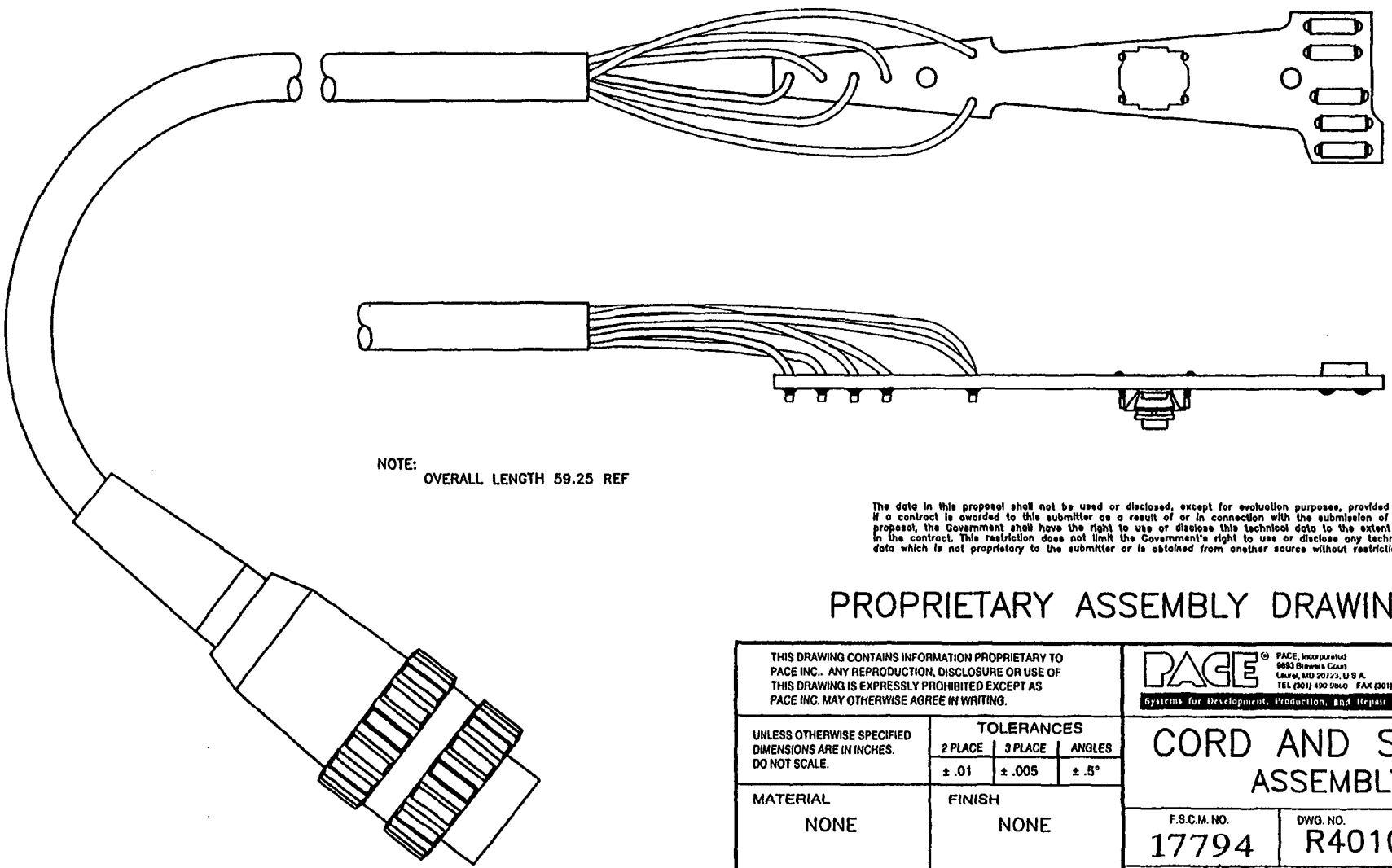

NOTE:
OVERALL LENGTH 59.25 REF

The data in this proposal shall not be used or disclosed, except for evaluation purposes, provided that if a contract is awarded to this submitter as a result of or in connection with the submission of this proposal, the Government shall have the right to use or disclose this technical data to the extent provided in the contract. This restriction does not limit the Government's right to use or disclose any technical data which is not proprietary to the submitter or is obtained from another source without restriction.

PROPRIETARY ASSEMBLY DRAWING

THIS DRAWING CONTAINS INFORMATION PROPRIETARY TO PACE INC.. ANY REPRODUCTION, DISCLOSURE OR USE OF THIS DRAWING IS EXPRESSLY PROHIBITED EXCEPT AS PACE INC. MAY OTHERWISE AGREE IN WRITING.

UNLESS OTHERWISE SPECIFIED DIMENSIONS ARE IN INCHES. DO NOT SCALE.

TOLERANCES		
2 PLACE	3 PLACE	ANGLES
± .01	± .005	± .5°

MATERIAL: NONE

FINISH: NONE

PACE®
PACE, Incorporated
9693 Brewers Court
Laurel, MD 20723, U.S.A.
TEL (301) 490 5660 FAX (301) 604 2160
Systems for Development, Production, and Repair of Electronic Assemblies

CORD AND SWITCH ASSEMBLY

F.S.C.M. NO.	DWG. NO.
17794	R4010-0098

REF. SCALE 1/2 | SK – | SHEET 1 OF 1

1A4A1W1 4010-0098
1A6A1W1 4010-0098
1A7A1W1 4010-0098

CAD 1 INC. 301-565-3340 567825

PACE® INCORPORATED

PROPRIETARY PARTS LIST

The data in this proposal shall not be used or disclosed, except for evaluation purposes, provided that if a contract is awarded to this submitter as a result of or in connection with the submission of this proposal, the Government shall have the right to use or disclose this technical data to the extent provided in the contract. This restriction does not limit the Government's right to use or disclose any technical data which is not proprietary to the submitter or is obtained from another source without restriction.

DWG. NO: R1309-0028 REV: A EC NO: 3759 DATE: 3/4/94 APP:

AMENDED P/L FORMAT: 8/23/94

TITLE: VISIFILTER II

INDEX	REFERENCE NO.	PART NO.	DESCRIPTION	FSCM	QTY
REF	1A4A2 1A7MP5	1309-0028	VISIFILTER II	17794	REF
1	1A4A2MP1 1A7MP5MP1	1309-0027	FILTER	17794	1

REVISIONS				
LEVEL	AUTHORIZATION	DES ENG SIGNATURE	MFG ENG SIGNATURE	RELEASE APPROVAL SIGNATURE/DATE
A	EC 3759	C. CARDINO	M. PANT	3/4/94

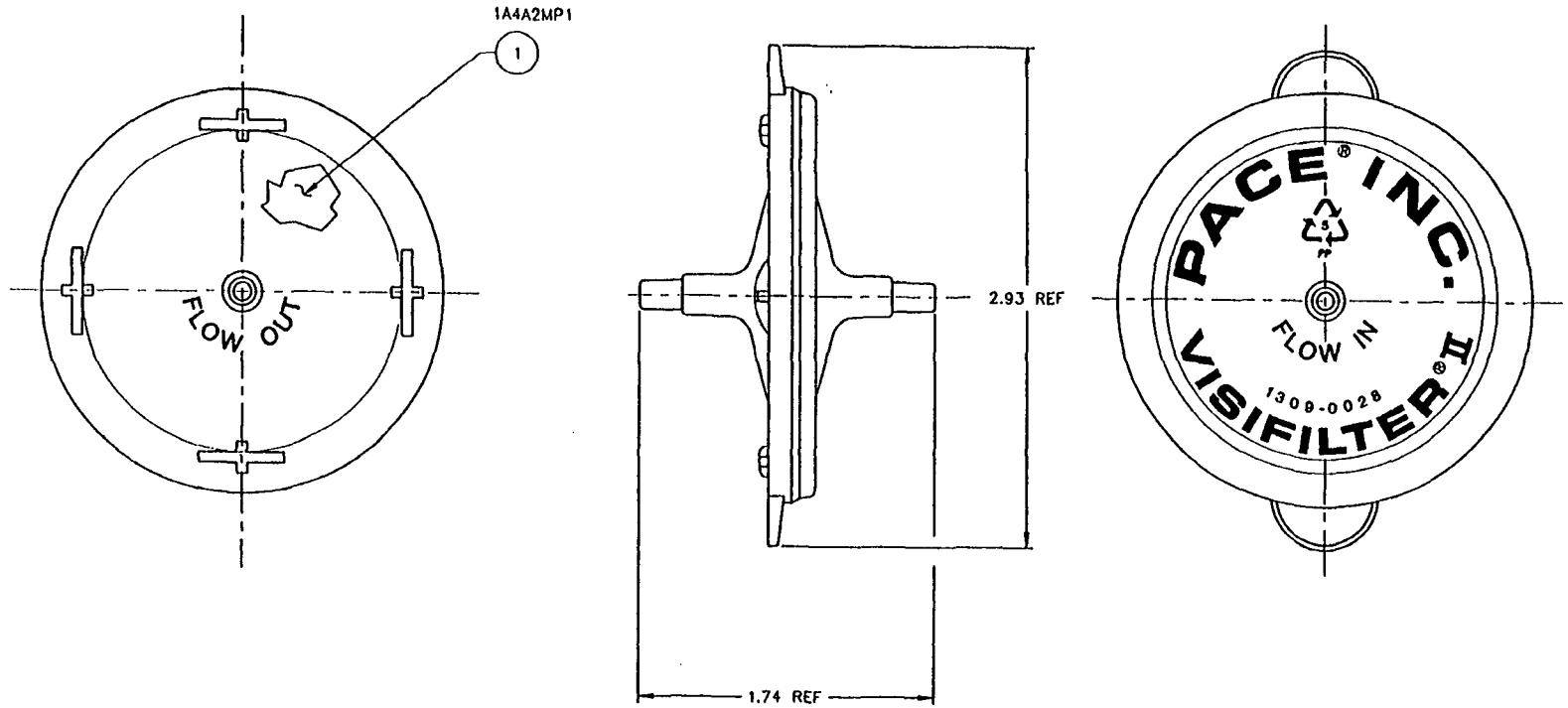

The data in this proposal shall not be used or disclosed, except for evaluation purposes, provided that if a contract is awarded to this submitter as a result of or in connection with the submission of this proposal, the Government shall have the right to use or disclose this technical data to the extent provided in the contract. This restriction does not limit the Government's right to use or disclose any technical data which is not proprietary to the submitter or is obtained from another source without restriction.

PROPRIETARY SOURCE CONTROL DRAWING

THIS DRAWING CONTAINS INFORMATION PROPRIETARY TO PACE INC. ANY REPRODUCTION, DISCLOSURE OR USE OF THIS DRAWING IS EXPRESSLY PROHIBITED EXCEPT AS PACE INC. MAY OTHERWISE AGREE IN WRITING.

UNLESS OTHERWISE SPECIFIED DIMENSIONS ARE IN INCHES. DO NOT SCALE.

TOLERANCES		
2 PLACE	3 PLACE	ANGLES
± .01	± .005	± .5°

MATERIAL: –

FINISH: –

PACE® INC.

VISIFILTER II

–

FSCM NO	DWG NO.
17794	R1309–0028

REF SCALE 2/1 | SH– | SHEET 1 OF 1

DWG NO C R1309-0028 A

PACE® INCORPORATED

PROPRIETARY PARTS LIST

The data in this proposal shall not be used or disclosed, except for evaluation purposes, provided that if a contract is awarded to this submitter as a result of or in connection with the submission of this proposal, the Government shall have the right to use or disclose this technical data to the extent provided in the contract. This restriction does not limit the Government's right to use or disclose any technical data which is not proprietary to the submitter or is obtained from another source without restriction.

DWG. NO: R1360-0083-P1 REV: A EC NO: 3759 DATE: 3/4/94 APP: ML

AMENDED P/L FORMAT: 8/23/94

TITLE: ADAPTER, TIP, 1/8" TIP, 3/16" SHANK

INDEX	REFERENCE NO.	PART NO.	DESCRIPTION	FSCM	QTY
REF	1A4MP7	1360-0083-P1	ADAPTER, TIP, 1/8" TIP, 3/16" SHANK	17794	REF
1	1A4MP7H1	1348-0547 GENERIC	SCREW, SET, #8-32 X 1/8",	17794 ZZZ	1

DWG NO.
B R1360-0083-P1 | A

REVISIONS				
LEVEL	AUTHORIZATION	DES. ENG. INITIAL	MFG. ENG. INITIAL	RELEASE APPROVAL INITIAL/DATE
A	EC 3759	C.CARDNO	M.PANT	03/04/94

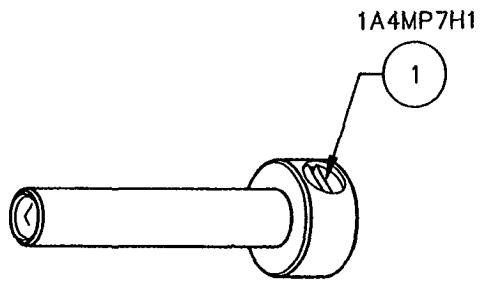

The data in this proposal shall not be used or disclosed, except for evaluation purposes, provided that if a contract is awarded to this submitter as a result of or in connection with the submission of this proposal, the Government shall have the right to use or disclose this technical data to the extent provided in the contract. This restriction does not limit the Government's right to use or disclose any technical data which is not proprietary to the submitter or is obtained from another source without restriction.

PROPRIETARY ASSEMBLY DRAWING

THIS DRAWING CONTAINS INFORMATION PROPRIETARY TO PACE INC.. ANY REPRODUCTION, DISCLOSURE OR USE OF THIS DRAWING IS EXPRESSLY PROHIBITED EXCEPT AS PACE INC. MAY OTHERWISE AGREE IN WRITING.

PACE (R)
PACE, Incorporated
9693 Brewers Court
Laurel, MD 20723, U.S.A.
TEL (301) 490-9860 FAX (301) 604-2180
Systems for Development, Production, and Repair of Electronic Assemblies

UNLESS OTHERWISE SPECIFIED DIMENSIONS ARE IN INCHES. DO NOT SCALE.

TOLERANCES		
2 PLACE	3 PLACE	ANGLES
± .01	± .005	± .5°

MATERIAL

FINISH

ADAPTER, TIP
1/8" TIP, 3/16" SHANK

F.S.C.M. NO.	DWG. NO.
17794	R1360-0083-P1

REF. SCALE 2/1 | SK | SHEET 1 OF 1

1A4HP7 1360-0083-P1

CAD 1 INC. 301-565-3340 567825

PAGE® INCORPORATED

PROPRIETARY PARTS LIST

The data in this proposal shall not be used or disclosed, except for evaluation purposes, provided that if a contract is awarded to this submitter as a result of or in connection with the submission of this proposal, the Government shall have the right to use or disclose this technical data to the extent provided in the contract. This restriction does not limit the Government's right to use or disclose any technical data which is not proprietary to the submitter or is obtained from another source without restriction.

DWG. NO: R6925-0014 REV: A EC NO: 3759 DATE: 3/4/94 APP: M

AMENDED P/L FORMAT: 8/23/94

TITLE: SODR-PEN, 21V 48W, SP-2 W/ACCESSORIES

INDEX	REFERENCE NO.	PART NO.	DESCRIPTION	FSCM	QTY
REF	1A5	6925-0014	SODR-PEN, 21V 48W, SP-2 W/ACCESSORIES	17794	REF
1	1A5A1	6025-0014	SODR-PEN, 21V 48W, SP-2	17794	1
2	1A5MP1	1121-0406	TIP, SP, CHISEL, SINGLE SIDE	17794	1
3	1A5MP2	1121-0336	TIP, SP, 3/16" SHANK, 1/32" CONICAL	17794	1
4	1A5MP3	1121-0414	TIP, SP, 3/16" SHANK, 1/16" CHISEL HC	17794	1
5	1A5MP4	1121-0360	TIP, SP, 3/16" SHANK, 3/32" CHISEL	17794	1
6	1A5MP5	1121-0337	TIP, SP, 3/16" SHANK, 1/8" CHISEL	17794	1

DWG NO.
B

REVISIONS				
LEVEL	AUTHORIZATION	DES. ENG. INITIAL	MFG. ENG. INITIAL	RELEASE APPROVAL INITIAL/DATE
A	EC 3759	C.CARDNO	M.PANT	03/04/94

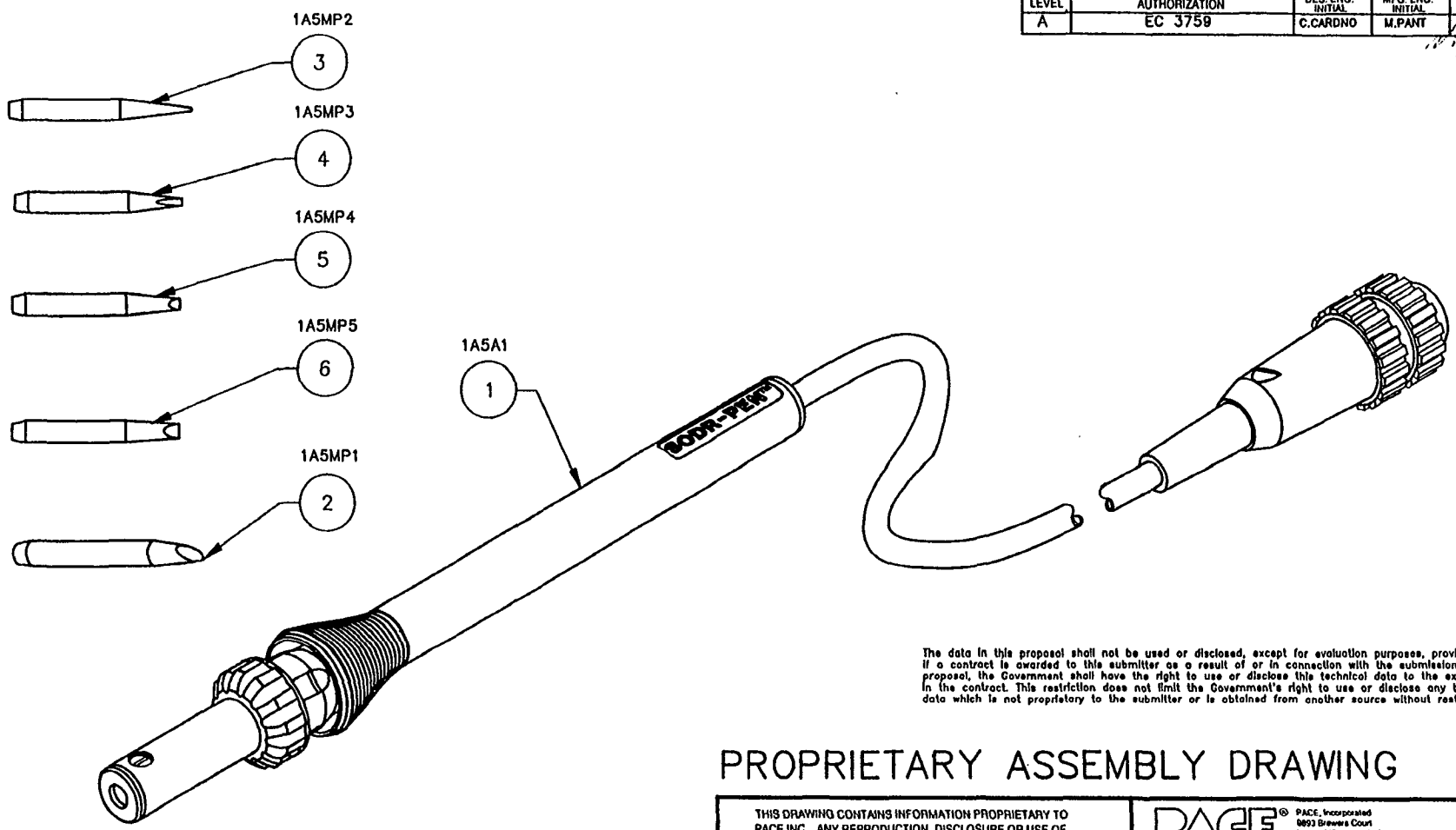

The data in this proposal shall not be used or disclosed, except for evaluation purposes, provided that if a contract is awarded to this submitter as a result of or in connection with the submission of this proposal, the Government shall have the right to use or disclose this technical data to the extent provided in the contract. This restriction does not limit the Government's right to use or disclose any technical data which is not proprietary to the submitter or is obtained from another source without restriction.

PROPRIETARY ASSEMBLY DRAWING

THIS DRAWING CONTAINS INFORMATION PROPRIETARY TO PACE INC.. ANY REPRODUCTION, DISCLOSURE OR USE OF THIS DRAWING IS EXPRESSLY PROHIBITED EXCEPT AS PACE INC. MAY OTHERWISE AGREE IN WRITING.

UNLESS OTHERWISE SPECIFIED DIMENSIONS ARE IN INCHES. DO NOT SCALE.

TOLERANCES		
2 PLACE	3 PLACE	ANGLES
± .01	± .005	± .5°

MATERIAL

FINISH

PACE®
PACE, Incorporated
8893 Brewers Court
Laurel, MD 20723, U.S.A.
TEL (301) 490-9660 FAX (301) 604-2180
Systems for Development, Production, and Repair of Electronic Assemblies

SODR-PEN, 21V 48W
SP-2 W/ACCESSORIES

F.S.C.M. NO.	DWG. NO.
17794	R6925-0014

REF. SCALE 1/1 | SK | SHEET 1 OF 1

CAD 1 INC. 301-585-3340 567825

1A5 6925-0014

PACE® INCORPORATED

PROPRIETARY PARTS LIST

The data in this proposal shall not be used or disclosed, except for evaluation purposes, provided that if a contract is awarded to this submitter as a result of or in connection with the submission of this proposal, the Government shall have the right to use or disclose this technical data to the extent provided in the contract. This restriction does not limit the Government's right to use or disclose any technical data which is not proprietary to the submitter or is obtained from another source without restriction.

DWG. NO: R6025-0014 REV: A EC NO: 3759 DATE: 3/4/94 APP:

AMENDED P/L FORMAT: 8/23/94

TITLE: SODR-PEN, 21V 48W, SP-2

INDEX	REFERENCE NO.	PART NO.	DESCRIPTION	FSCM	QTY
REF	1A5A1	6025-0014	SODR-PEN, 21V 48W, SP-2	17794	REF
1	1A5A1A1	6010-0086	HEATER ASSY, SP-2, 21VAC, 48W	17794	1
2	1A5A1J1	1207-0121 61622-1	RECEPTACLE, WIRE, 20-24 AWG	17794 09769	5
3	1A5A1MP1	1119-0086	HANDLE	17794	1
4	1A5A1MP2	1346-0069 ALPHA FIT 350-3/32	TUBING,SHRINK, 3/32" DIA.,CLEAR(5 PCS@5/8"LG.EA)	17794 92194	3.13"
5	1A5A1MP3	1360-0093	INSULATOR	17794	1
6	1A5A1MP4	1213-0063	RING	17794	1
7	1A5A1MP5	1360-0094	NUT, RETAINING	17794	1
8	1A5A1W1	1332-0168	CABLE ASSY	17794	1

REVISIONS				
LEVEL	AUTHORIZATION	DES ENG initial	WG ENG initial	RELEASE APPROVAL initial date
A	EC 3759	E.CARDINO	M.PAUT	03/04/96

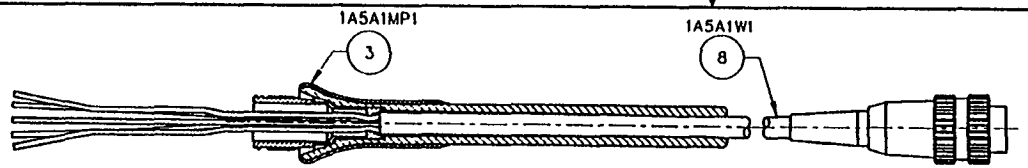

STEP NO. 1

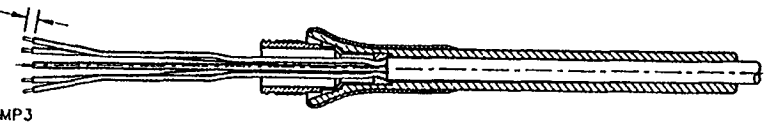

STEP NO. 2

4 COLOR DESIGNATIONS: "W" WHITE WIRES (2 PLCS), "B" BLUE WIRES (2 PLCS), GREEN WIRE IN HOLE REMAINING. WHEN FEEDING CORD ASS'Y WIRES, (ITEM 8), THRU INSULATOR, (ITEM 5), BE SURE WIRES ARE NOT CROSSED OR TWISTED SO INSULATOR CAN BE PROPERLY SEATED IN HANDLE ASSEMBLY, (ITEM 3).

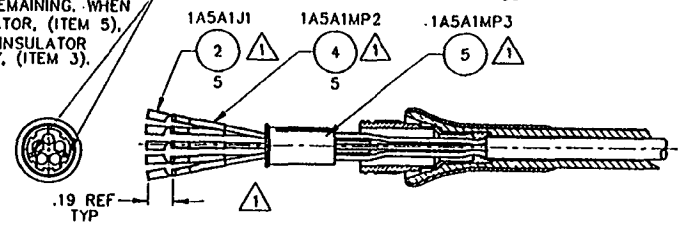

STEP NO.3

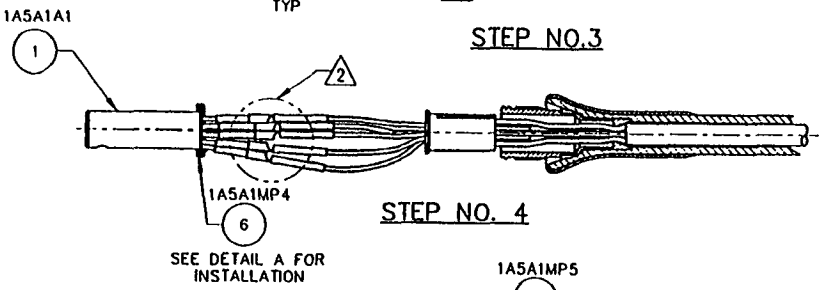

STEP NO. 4

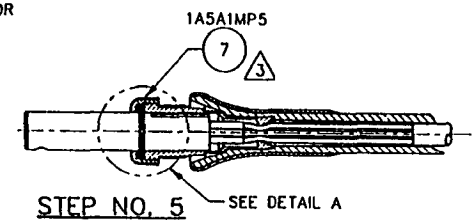

STEP NO. 5

NOTES:

1. INSTALL PINS (ITEM 2) AND HEATSHRINK TUBING (ITEM 4) BEFORE INSTALLING INSULATOR (ITEM 5). INSTALL HEAT-SHRINK TUBING STARTING FROM CRIMPED PORTION OF PINS AND ENDING ON WIRES. NOTE THAT TUBING IS NOT PERMITTED ON MATING PORTION (.19 DIM) OF PINS. INSTALL INSULATOR PER FLAGGED NOTE 4 ON FIELD OF DRAWING.

2. INSTALL HEATER ASSY (ITEM 1) BY MATING ALIKE WIRE COLORS (WHITE TO WHITE, BLUE TO BLUE ETC...). BE SURE WIRES ARE NOT CROSSED OR TWISTED SO HEATER ASSEMBLY CAN BE PROPERLY SEATED ON INSULATOR AS SHOWN IN STEP NO. 4.

3. RETAINING NUT (ITEM 7) TO BE INSTALLED AS SHOWN AND TIGHTEN FIRMLY BY HAND.

4. SEE STEP NO. 2 FOR DETAILS

6. HEATER RESISTANCE 8.26Ω TO 9.20Ω
SENSOR RESISTANCE R=109Ω TO 110Ω

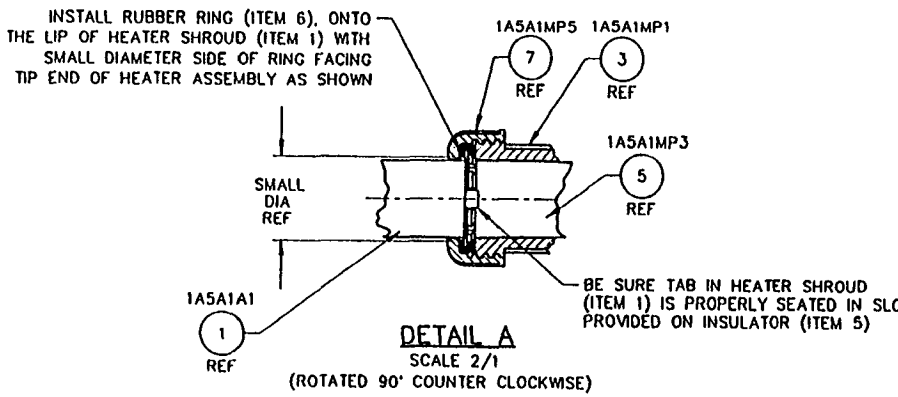

DETAIL A
SCALE 2/1
(ROTATED 90° COUNTER CLOCKWISE)

The data in this proposal shall not be used or disclosed, except for evaluation purposes, provided that if a contract is awarded to this submitter as a result of or in connection with the submission of this proposal, the Government shall have the right to use or disclose this technical data to the extent provided in the contract. This restriction does not limit the Government's right to use or disclose any technical data which is not proprietary to the submitter or is obtained from another source without restriction.

PROPRIETARY ASSEMBLY DRAWING

THIS DRAWING CONTAINS INFORMATION PROPRIETARY TO PACE INC. ANY REPRODUCTION, DISCLOSURE OR USE OF THIS DRAWING IS EXPRESSLY PROHIBITED EXCEPT AS PACE INC. MAY OTHERWISE AGREE IN WRITING.

UNLESS OTHERWISE SPECIFIED DIMENSIONS ARE IN INCHES DO NOT SCALE

TOLERANCES		
2 PLACE	3 PLACE	ANGLES
±.01	±.005	±.5°

MATERIAL

FINISH

PACE

SODR-PEN
21V 48W, SP2

F S C M NO	DWG NO
17794	R6025-0014

REF. SCALE 1/1 | SK | SHEET 1 OF 1

DWG NO. CR 6025-0014 A

1A5A1 6025-0014

PACE INCORPORATED

PROPRIETARY PARTS LIST

The data in this proposal shall not be used or disclosed, except for evaluation purposes, provided that if a contract is awarded to this submitter as a result of or in connection with the submission of this proposal, the Government shall have the right to use or disclose this technical data to the extent provided in the contract. This restriction does not limit the Government's right to use or disclose any technical data which is not proprietary to the submitter or is obtained from another source without restriction.

DWG. NO: R6010-0086 REV: A EC NO: 3759 DATE: 3/4/94 APP:

AMENDED P/L FORMAT: 8/23/94

TITLE: HEATER ASSY, 21VAC, 48W, SP-2

INDEX	REFERENCE NO.	PART NO.	DESCRIPTION	FSCM	QTY
REF	1A5A1A1	6010-0086	HEATER ASSY, 21VAC, 48W, SP-2	17794	REF
1	1A5A1A1H1	1348-0547	SCREW, SET #8-32 X .125" LG.	17794	1
		GENERIC		ZZZ	

DWG NO. B R 6010-0086 | A

REVISIONS				
LEVEL	AUTHORIZATION	DES. ENG. INITIAL	MFG. ENG. INITIAL	RELEASE APPROVAL INITIAL/DATE
A	EC 3759	C.CARDNO	M.PAHT	03/04/94

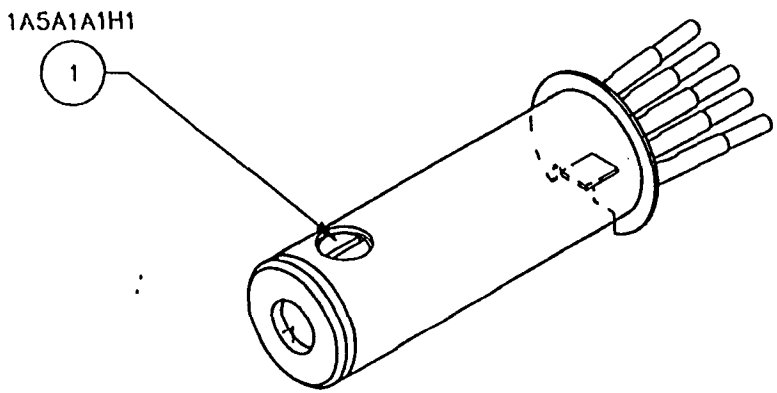

The data in this proposal shall not be used or disclosed, except for evaluation purposes, provided that if a contract is awarded to this submitter as a result of or in connection with the submission of this proposal, the Government shall have the right to use or disclose this technical data to the extent provided in the contract. This restriction does not limit the Government's right to use or disclose any technical data which is not proprietary to the submitter or is obtained from another source without restriction.

PROPRIETARY ASSEMBLY DRAWING

THIS DRAWING CONTAINS INFORMATION PROPRIETARY TO PACE INC.. ANY REPRODUCTION, DISCLOSURE OR USE OF THIS DRAWING IS EXPRESSLY PROHIBITED EXCEPT AS PACE INC. MAY OTHERWISE AGREE IN WRITING.

PACE™ PACE, Incorporated
9063 Brewers Court
Laurel, MD 20723, U.S.A.
TEL (301) 490-9660 FAX (301) 604-3180
Systems for Development, Production, and Repair of Electronic Assemblies

UNLESS OTHERWISE SPECIFIED DIMENSIONS ARE IN INCHES. DO NOT SCALE.

TOLERANCES		
2 PLACE	3 PLACE	ANGLES
± .01	± .005	± .5°

MATERIAL

FINISH

HEATER ASSY.
SP-2,21VAC,48W

F.S.C.M. NO.	DWG. NO.
17794	R6010-0086

REF. SCALE 2/1 | SK | SHEET 1 OF 1

1A5A1A1 6010-0086

CAD 1 INC. 301-949-3240 387229

PAGE® INCORPORATED

PROPRIETARY PARTS LIST

The data in this proposal shall not be used or disclosed, except for evaluation purposes, provided that if a contract is awarded to this submitter as a result of or in connection with the submission of this proposal, the Government shall have the right to use or disclose this technical data to the extent provided in the contract. This restriction does not limit the Government's right to use or disclose any technical data which is not proprietary to the submitter or is obtained from another source without restriction.

DWG. NO: R7923-0002

TITLE: THERMOJET, MINI, TJ-70

REV: A EC NO: 3759 DATE: 3/4/94
AMENDED P/L FORMAT: 8/23/94
B EC NO: 4366 DATE: 5/21/96

APP: M

INDEX	REFERENCE NO.	PART NO.	DESCRIPTION	FSCM	QTY
REF	1A6	7923-0002	THERMOJET, MINI, TJ-70	17794	REF
1	1A6A1	7023-0002	THERMOJET, MINI, TJ 70	17794	1
2	1A6MP1	1342-0015-08 MS 70E008	TUBING, SILICONE, BLACK, .125 ID, 54" LG.	17794 ZZZ	1
3	1A6MP2	1259-0087	DISCONNECT, QUICK CHANGE HOSE MT., MALE	17794	1
4	1A6MP3	1211-0036 5000-2	CLAMP, HOSE, REUSABLE	17794 90526	1
5	1A6MP4	1321-0085-01	HOLDER, WIRE TO TUBE	17794	6
6	1A6MP5	1127-0002	BRUSH, BRISTLE, TUBE CLEANING	17794	1
7	1A6MP6	1121-0330-P1	TIP, TJ, BENT, DBL, .17, SOIC	17794	1
8	1A6MP7	1121-0366-P1	TIP, TJ, SINGLE, STR	17794	1
9	1A6MP8	1121-0371-P1	TIP, TJ, FLAT END, .24 X .074	17794	1
10	1A6MP9	1121-0338-P1	TIP, TJ, SINGLE POINT	17794	1

REVISIONS				
LEVEL	AUTHORIZATION	DES. ENG. APPR.	MFG. ENG. APPR.	RELEASE APPROVAL VALIDATE
A	EC 3759	C.CARDINO	M.PANT	03/01/84
B	EC 4366	C.CARDINO	M.PANT	05/31/86

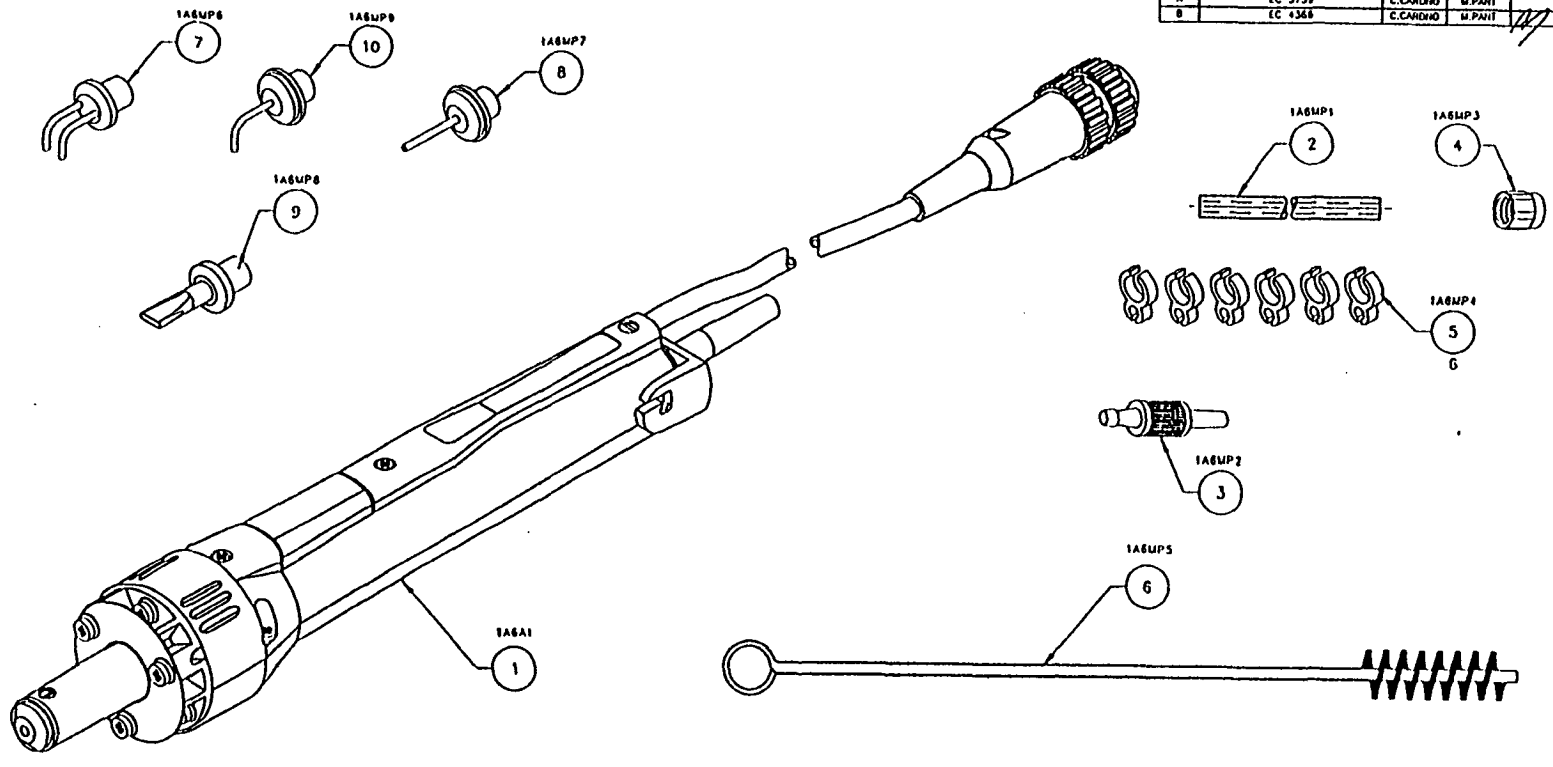

The data in this proposal shall not be used or disclosed, except for evaluation purposes, provided that if it contains or is incorporated into this submittal as a result of or in connection with the submission of this proposal, the Government shall have the right to use or disclose the included data to the extent provided in the contract. This restriction does not limit the Government's right to use or disclose any technical data which is not proprietary to the submitter or is obtained from another source without restriction.

PROPRIETARY ASSEMBLY DRAWING

THIS DRAWING CONTAINS INFORMATION PROPRIETARY TO PACE INC. ANY REPRODUCTION, DISCLOSURE OR USE OF THIS DRAWING IS EXPRESSLY PROHIBITED EXCEPT AS PACE INC. MAY OTHERWISE AGREE IN WRITING

PACE

UNLESS OTHERWISE SPECIFIED DIMENSIONS ARE IN INCHES DO NOT SCALE

TOLERANCES		
2 PLACE	3 PLACE	ANGLES
±.01	±.005	±.5°

MATERIAL —

FINISH —

THERMOJET
MINI,TJ-70

FSCM NO 17794

DWG NO R7923-0002

REF SCALE 1/L | SH— | SHEET 1 OF 1

3A6 R923-0002

PACE® INCORPORATED

PROPRIETARY PARTS LIST

The data in this proposal shall not be used or disclosed, except for evaluation purposes, provided that if a contract is awarded to this submitter as a result of or in connection with the submission of this proposal, the Government shall have the right to use or disclose this technical data to the extent provided in the contract. This restriction does not limit the Government's right to use or disclose any technical data which is not proprietary to the submitter or is obtained from another source without restriction.

DWG. NO: R7023-0002 REV: A EC NO: 3759 DATE: 3/4/94 APP:

AMENDED P/L FORMAT: 8/23/94

TITLE: THERMOJET, MINI, TJ 70

INDEX	REFERENCE NO.	PART NO.	DESCRIPTION	FSCM	QTY
REF	1A6A1	7023-0002	THERMOJET, MINI, TJ 70	17794	REF
1	1A6A1A1	6010-0084	HEATER ASSY, TJ-70	17794	1
2	1A6A1A2	4010-0101	REAR SEAL ASSY	17794	1
3	1A6A1H1	1348-0197 GENERIC	SCREW, #2-28 X 9/32" FIL. HD. PHIL.	17794 ZZZ	2
4	1A6A1H2	1405-0527 GENERIC	SCREW, #2-28 X 7/16" FLAT HD. PHIL.	17794 ZZZ	2
5	1A6A1H3	1405-0395 GENERIC	SCREW, #4-40 X 1/4" LG. PAN HD. W/LOCKWASHER	17794 ZZZ	3
6	1A6A1H4	1405-0534 GENERIC	SCREW, #4-40 X 5/16" LG. PAN HD. W/LOCKWASHER	17794 ZZZ	3
7	1A6A1H5	1405-0342 GENERIC	SCREW, SET WHITE NYLON #8-32 X 1/8" LG.	17794 ZZZ	1
8	1A6A1MP1	1119-0048	HANDLE, TOP HALF	17794	1
9	1A6A1MP2	1119-0047	HANDLE, BOTTOM HALF	17794	1
10	1A6A1MP3	1313-0115	GUIDE, COVER, PCB	17794	1
11	1A6A1MP4	1119-0064	BUTTON	17794	1
12	1A6A1MP5	1344-0060	CHAMBER, PRESSURE	17794	1
13	1A6A1MP6	1209-0006	CLIP, SPRING	17794	2
14	1A6A1MP7	1360-0005	DISSIPATOR	17794	1
15	1A6A1MP8	1351-0526	LABEL, MINI THERMOJET	17794	1
16	1A6A1W1	4010-0098	CORD/SWITCH ASSY	17794	1

REVISIONS				
LEVEL	AUTHORIZATION	DESIGN ENGR INITIAL	QA QUALITY INITIAL	MFG/ASSY SUPERVISOR INITIAL/DATE
A	EC 3759	C.CARDINO	M.PANT	03/05/96

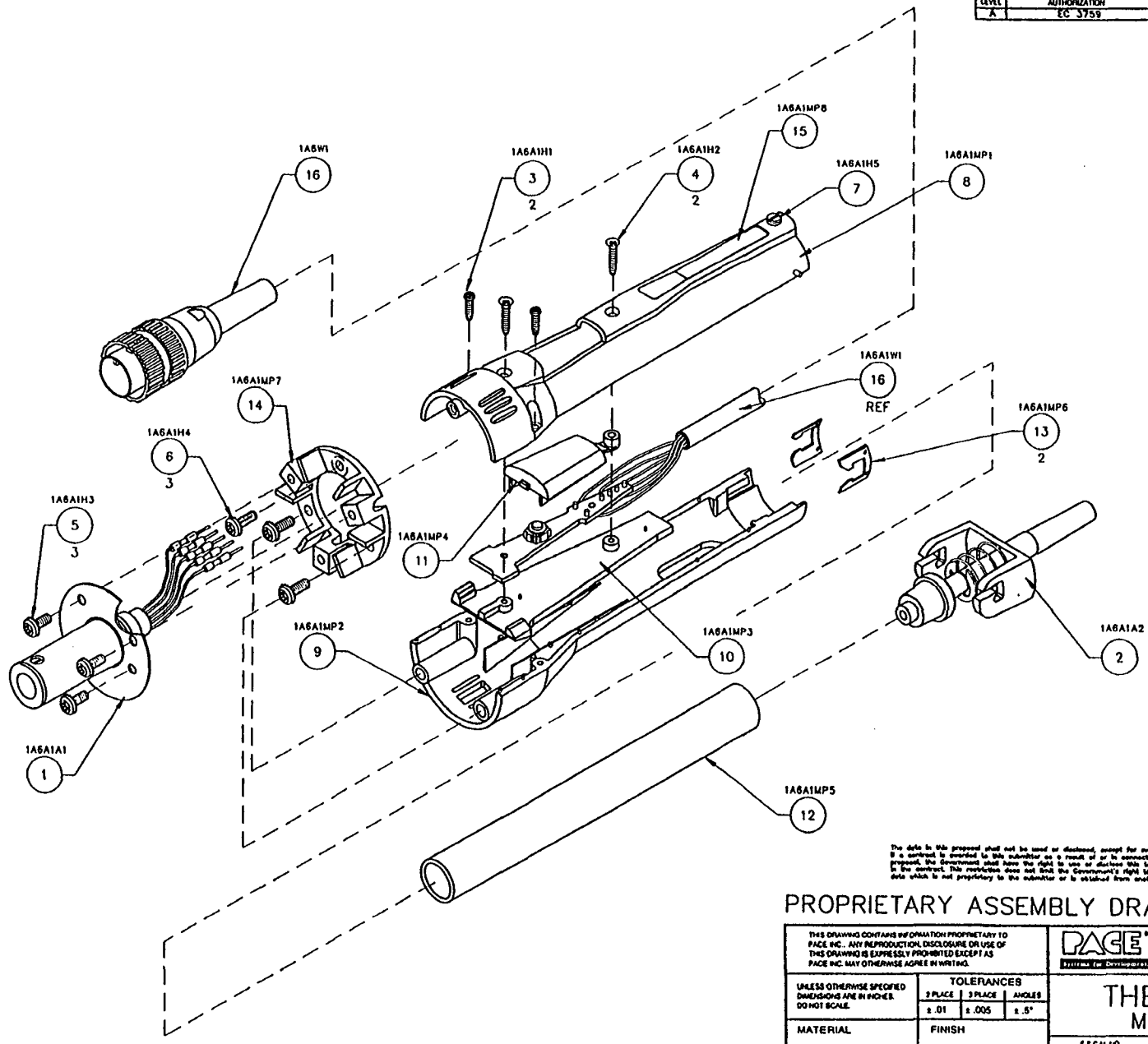

The data in this proposal shall not be used or disclosed, except for evaluation purposes, provided that if a contract is awarded to this submitter as a result of or in connection with the submission of this proposal, the Government shall have the right to use or disclose this technical data to the extent provided in the contract. This restriction does not limit the Government's right to use or disclose any technical data which is not proprietary to the submitter or is obtained from another source without restriction.

PROPRIETARY ASSEMBLY DRAWING

THIS DRAWING CONTAINS INFORMATION PROPRIETARY TO PACE INC.. ANY REPRODUCTION, DISCLOSURE OR USE OF THIS DRAWING IS EXPRESSLY PROHIBITED EXCEPT AS PACE INC. MAY OTHERWISE AGREE IN WRITING.

UNLESS OTHERWISE SPECIFIED DIMENSIONS ARE IN INCHES. DO NOT SCALE.

TOLERANCES		
2 PLACE	3 PLACE	ANGLES
± .01	± .005	± .5°

MATERIAL

FINISH

PACE

Systems for Development, Production, and Repair of Electronic Assemblies

THERMOJET
MINI,TJ 70

FSCM NO.	DWG NO.
17794	R7023-0002

REF SCALE 1/1 | SK | SHEET 1 OF 1

1A6A1 R7023-0002

DWG NO. R7023-0002 A

PAGE® INCORPORATED

PROPRIETARY PARTS LIST

The data in this proposal shall not be used or disclosed, except for evaluation purposes, provided that if a contract is awarded to this submitter as a result of or in connection with the submission of this proposal, the Government shall have the right to use or disclose this technical data to the extent provided in the contract. This restriction does not limit the Government's right to use or disclose any technical data which is not proprietary to the submitter or is obtained from another source without restriction.

DWG. NO: R6010-0084 REV: A EC NO: 3759 DATE: 3/4/94 APP: ml

AMENDED P/L FORMAT: 8/23/94

TITLE: HEATER ASSY, TJ-70

INDEX	REFERENCE NO.	PART NO.	DESCRIPTION	FSCM	QTY
REF	1A6A1A1	6010-0084	HEATER ASSY, TJ-70	17794	REF
1	1A6A1A1H1	1348-0547	SCREW, SET #8-32 X .125" LG.	17794	1
		GENERIC		ZZZ	
2	1A6A1A1MP1	1213-0033	SEAL, FRONT	17794	1

DWG NO. B R6010-0084 | A

REVISIONS				
LEVEL	AUTHORIZATION	DES. ENG. INITIAL	MFG. ENG. INITIAL	RELEASE APPROVAL INITIAL/DATE
A	EC 3759	C.CARDINO	M.PAINT	03/04/94

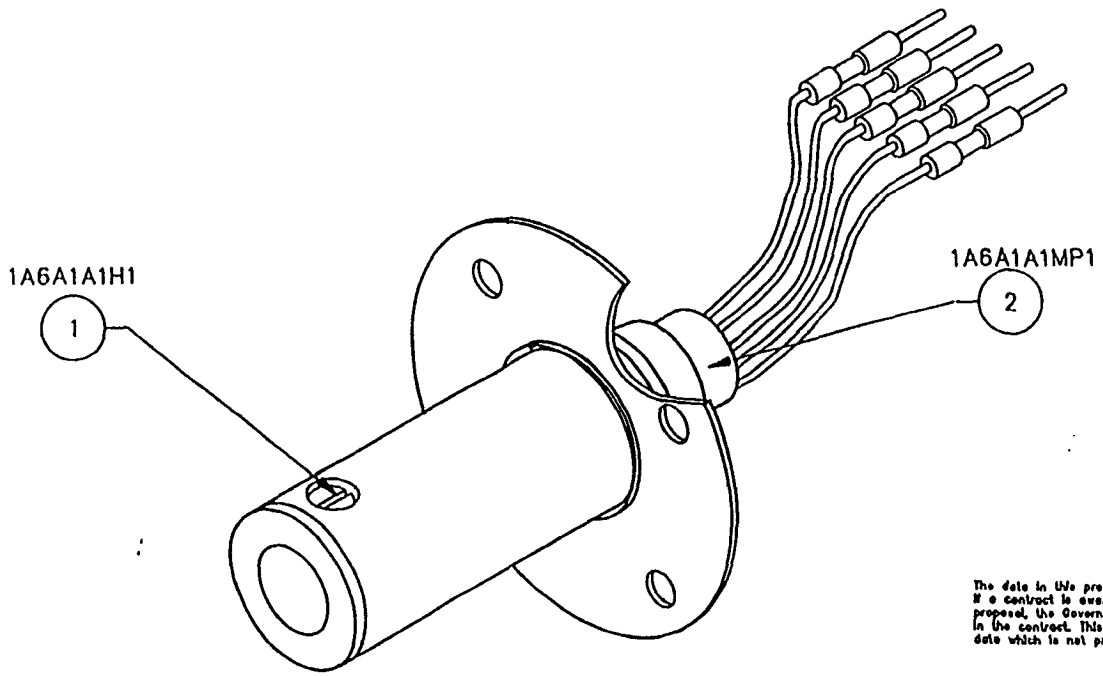

The data in this proposal shall not be used or disclosed, except for evaluation purposes, provided that if a contract is awarded to this submitter as a result of or in connection with the submission of this proposal, the Government shall have the right to use or disclose this technical data to the extent provided in the contract. This restriction does not limit the Government's right to use or disclose any technical data which is not proprietary to the submitter or is obtained from another source without restriction.

PROPRIETARY ASSEMBLY DRAWING

THIS DRAWING CONTAINS INFORMATION PROPRIETARY TO PACE INC.. ANY REPRODUCTION, DISCLOSURE OR USE OF THIS DRAWING IS EXPRESSLY PROHIBITED EXCEPT AS PACE INC. MAY OTHERWISE AGREE IN WRITING.

PACE™ PACE, Incorporated
9883 Brewers Court
Laurel, MD 20723, U.S.A.
TEL (301) 490 0660 FAX (301) 604 2166
Systems for Development, Production, and Repair of Electronic Assemblies

UNLESS OTHERWISE SPECIFIED DIMENSIONS ARE IN INCHES. DO NOT SCALE.

TOLERANCES		
2 PLACE	3 PLACE	ANGLES
± .01	± .005	± .5°

MATERIAL

FINISH

HEATER ASSY.
TJ-70

F.S.C.M. NO.	DWG. NO.
17794	R6010-0084

REF. SCALE 2/1 | SK | SHEET 1 OF 1

1A6A1A1 6010-0084

CAD 1 INC. 301-585-2340 587825

PACE® INCORPORATED

PROPRIETARY PARTS LIST

The data in this proposal shall not be used or disclosed, except for evaluation purposes, provided that if a contract is awarded to this submitter as a result of or in connection with the submission of this proposal, the Government shall have the right to use or disclose this technical data to the extent provided in the contract. This restriction does not limit the Government's right to use or disclose any technical data which is not proprietary to the submitter or is obtained from another source without restriction.

DWG. NO: R7924-0001 REV: A EC NO: 3759 DATE: 3/4/94 APP: M

AMENDED P/L FORMAT: 8/23/94

TITLE: THERMOPIK, TP-65 W/ACCESSORIES B EC NO: 4366 DATE: 5/21/96

INDEX	REFERENCE NO.	PART NO.	DESCRIPTION	FSCM	QTY
REF	1A7	7924-0001	THERMOPIK, TP-65 W/ACCESSORIES	17794	REF
1	1A7A1	7024-0001	THERMOPIK, TP-65	17794	1
2	1A7MP1	1342-0015-08 MS 70E00B	TUBING, SILICONE, BLACK, .125 ID, 54" LG.	17794 ZZZ	1
3	1A7MP2	1325-0003-07	TUBING, PVC, CLEAR, .125 ID, 1" LG.	17794	2
4	1A7MP3	1259-0087	DISCONNECT, QUICK CHANGE HOSE MT., MALE	17794	2
5	1A7MP4	1259-0086	DISCONNECT, QUICK CHANGE HOSE MT., FEMALE	17794	1
6	1A7MP5	1309-0028	VISIFILTER II	17794	1
7	1A7MP6	1211-0036 5000-2	CLAMP, HOSE, REUSABLE	17794 90526	1
8	1A7MP7	1321-0085-01	HOLDER, WIRE TO TUBE	17794	6
9	1A7MP8	1121-0322-002-P1	TIP, TP, FP, .66 X .90 ID	17794	1
10	1A7MP9	1121-0382	CUP, VACUUM, .175 DIA. X .197 HT.	17794	1
11	1A7MP10	1121-0383	CUP, VACUUM, .300 DIA. X .197 HT.	17794	1
12	1A7MP11	1121-0384	CUP, VACUUM, .500 DIA. X .197 HT.	17794	1

REVISIONS				
LEVEL	AUTHORIZATION	DES. ENG. INITIAL	DES. ENG. INITIAL	RELEASE APPROVAL INITIAL/DATE
A	EC 3759	C.CARDINO	M.PANT	03/04/94
B	EC 4366	C.CARDINO	M.PANT	05/31/96

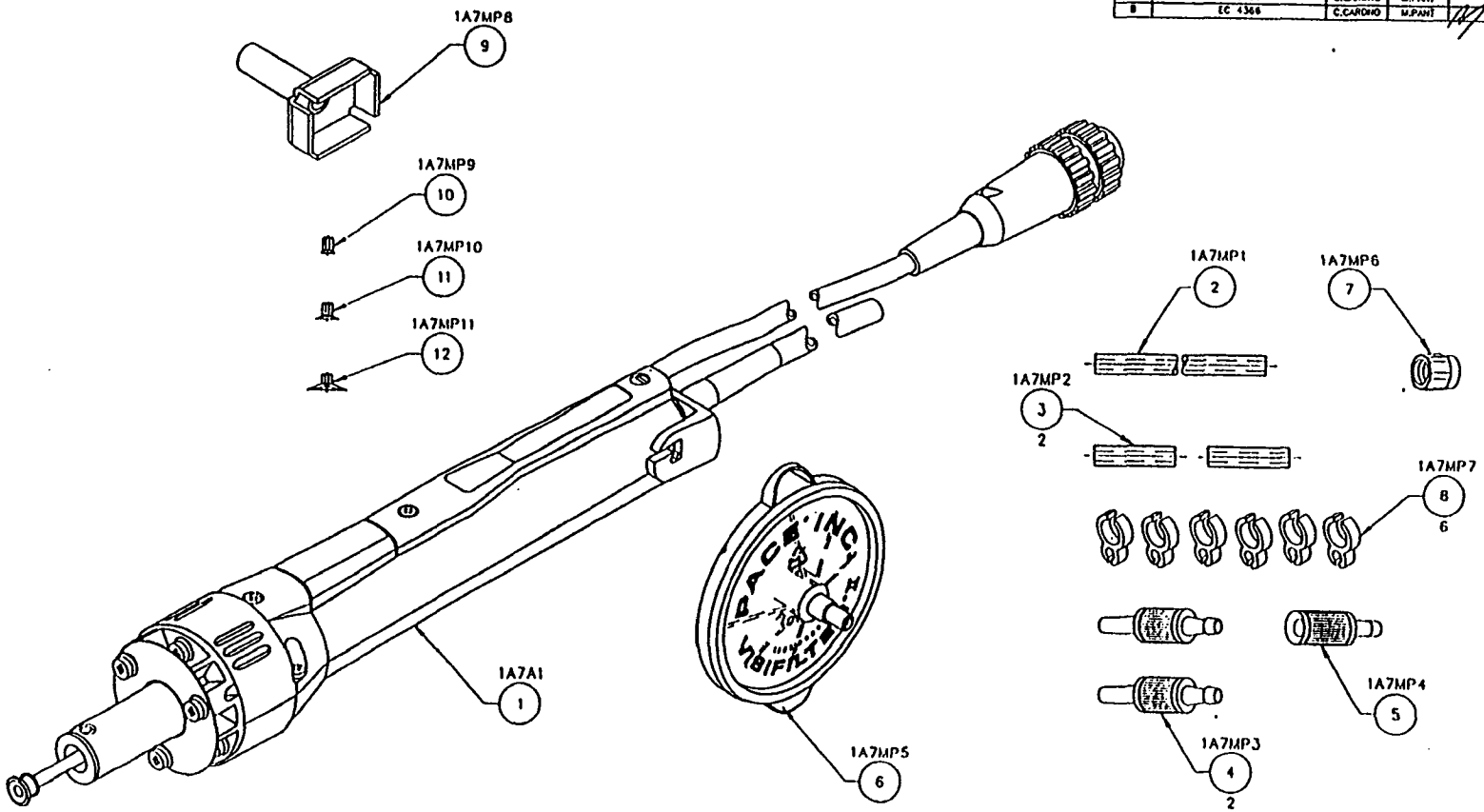

The data in this proposal shall not be used or disclosed, except for evaluation purposes, provided that if a contract is awarded to this offeror as a result of or in connection with the submission of this proposal, the Government shall have the right to use or disclose the technical data in the award proposal. This restriction does not limit the Government's right to use or disclose any technical data which is not proprietary to the offeror or is obtained from another source without restriction.

PROPRIETARY ASSEMBLY DRAWING

THIS DRAWING CONTAINS INFORMATION PROPRIETARY TO PACE INC. ANY REPRODUCTION, DISCLOSURE OR USE OF THIS DRAWING IS EXPRESSLY PROHIBITED EXCEPT AS PACE INC. MAY OTHERWISE AGREE IN WRITING.

UNLESS OTHERWISE SPECIFIED DIMENSIONS ARE IN INCHES DO NOT SCALE

TOLERANCES		
1 PLACE	2 PLACE	ANGLES
±.01	±.005	±.5°

MATERIAL

FINISH

PACE

THERMOPIK
TP-65 W/ACCESSORIES

FSCM NO	DWG NO
17794	R7924-0001

REF SCALE 1/1 | SH | SHEET 1 OF 1

1A7 R7924-0001

PACE INCORPORATED

PROPRIETARY PARTS LIST

The data in this proposal shall not be used or disclosed, except for evaluation purposes, provided that if a contract is awarded to this submitter as a result of or in connection with the submission of this proposal, the Government shall have the right to use or disclose this technical data to the extent provided in the contract. This restriction does not limit the Government's right to use or disclose any technical data which is not proprietary to the submitter or is obtained from another source without restriction.

DWG. NO: R7024-0001 REV: A EC NO: 3759 DATE: 3/4/94 APP: M

AMENDED P/L FORMAT: 8/23/94

TITLE: THERMOPIK, TP-65

INDEX	REFERENCE NO.	PART NO.	DESCRIPTION	FSCM	QTY
REF	1A7A1	7024-0001	THERMOPIK, TP-65	17794	REF
1	1A7A1A1	6010-0081	HEATER ASSY, TP-65	17794	1
2	1A7A1A2	4010-0101	REAR SEAL ASSY	17794	1
3	1A7A1H1	1405-0395 GENERIC	SCREW, #4-40 X 1/4"LG. PAN HD. W/LOCKWASHER	17794 ZZZ	3
4	1A7A1H2	1405-0534 GENERIC	SCREW, #4-40 X 5/16"LG. PAN HD. W/ LOCKWASHER	17794 ZZZ	3
5	1A7A1H3	1405-0527 GENERIC	SCREW, FLAT HD. #2-28 X 7/16"LG.	17794 ZZZ	2
6	1A7A1H4	1348-0197 GENERIC	SCREW, FIL. HD., #2-28 X 9/32"LG.	17794 ZZZ	2
7	1A7A1H5	1405-0342 GENERIC	SCREW, SET, #8-32 X 1/8"LG.	17794 ZZZ	1
8	1A7A1H6	1348-0547 GENERIC	SCREW, SET, #8-32 X .125" LG.	17794 ZZZ	2
9	1A7A1MP1	1313-0115	GUIDE COVER, PCB	17794	1
10	1A7A1MP2	1344-0059	VACUUM CYLINDER, THERMOPIK	17794	1
11	1A7A1MP3	1119-0064	BUTTON, EXTRACTOR	17794	1
12	1A7A1MP4	1360-0005	DISSIPATOR	17794	1
13	1A7A1MP5	1213-0001	SEAL	17794	1
14	1A7A1MP6	1119-0047	HANDLE, BOTTOM HALF	17794	1
15	1A7A1MP7	1119-0048	HANDLE, TOP HALF	17794	1
16	1A7A1MP8	1209-0006	CLIP, SPRING	17794	2
17	1A7A1MP9	1344-0058	BEARING, VACUUM TUBE	17794	1
18	1A7A1MP10	1360-0073	LOCATOR, CYLINDER, THERMOPIK	17794	1
19	1A7A1MP11	1321-0226	COLLAR, THERMOPIK	17794	2
20	1A7A1MP12	1348-0552	WASHER, VACUUM TUBE	17794	1
21	1A7A1MP13	4010-0099	VACUUM TUBE ASSY	17794	1

DWG. NO: R7024-0001 REV: A EC NO: 3759 DATE: 3/4/94 APP:

AMENDED P/L FORMAT: 8/23/94

TITLE: THERMOPIK, TP-65

INDEX	REFERENCE NO.	PART NO.	DESCRIPTION	FSCM	QTY
22	1A7A1MP14	1348-0387 5133-25 1000-25	RING, RETAINING	17794 79136 97464	1
23	1A7A1MP15	1221-0101	SPRING, COMPRESSION, 3.50"LG.	17794	1
24	1A7A1MP16	1351-0528	LABEL, THERMOPIK	17794	1
25	1A7A1W1	4010-0098	CORD/SWITCH ASSY	17794	1

BLANK

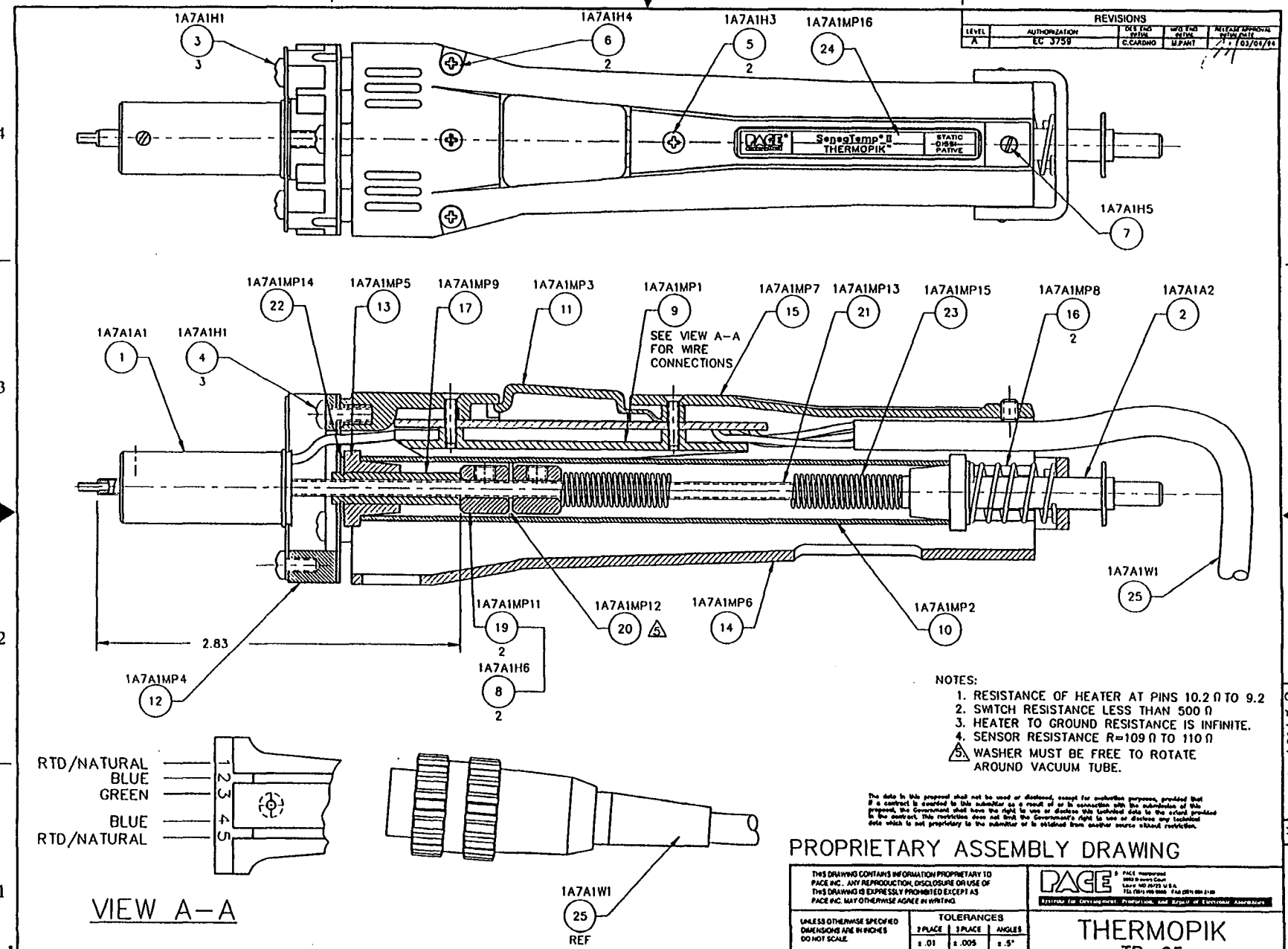
REVISIONS
LEVEL | AUTHORIZATION | DES ENG REVIEW | MFG ENG REVIEW | RELEASE APPROVAL INITIAL DATE
A | EC 3759 | C.CARDNO | M.PART | 03/04/94
1A7A1H1
1A7A1H4
1A7A1H3
1A7A1MP16
1A7A1H5
PACE
SensoTemp II
THERMOPIK
STATIC DISSIPATIVE
1A7A1MP14
1A7A1MP5
1A7A1MP9
1A7A1MP3
1A7A1MP1
1A7A1MP7
1A7A1MP13
1A7A1MP15
1A7A1MP8
1A7A1A2
1A7A1A1
SEE VIEW A-A FOR WIRE CONNECTIONS
1A7A1W1
1A7A1MP11
1A7A1MP12
1A7A1MP6
1A7A1MP2
2.83
1A7A1MP4
1A7A1H6
RTD/NATURAL
BLUE
GREEN
BLUE
RTD/NATURAL
VIEW A-A
1A7A1W1
REF
NOTES:
1. RESISTANCE OF HEATER AT PINS 10.2 Ω TO 9.2
2. SWITCH RESISTANCE LESS THAN 500 Ω
3. HEATER TO GROUND RESISTANCE IS INFINITE.
4. SENSOR RESISTANCE R=109 Ω TO 110 Ω
5. WASHER MUST BE FREE TO ROTATE AROUND VACUUM TUBE.
PROPRIETARY ASSEMBLY DRAWING
THIS DRAWING CONTAINS INFORMATION PROPRIETARY TO PACE INC. ANY REPRODUCTION, DISCLOSURE OR USE OF THIS DRAWING IS EXPRESSLY PROHIBITED EXCEPT AS PACE INC. MAY OTHERWISE AGREE IN WRITING.
UNLESS OTHERWISE SPECIFIED DIMENSIONS ARE IN INCHES DO NOT SCALE
TOLERANCES
MATERIAL
FINISH
THERMOPIK
TP-65
FSCM NO. 17794
DWG NO. R7024-0001
REF SCALE 2/L
SHEET 1 OF 1
DWG NO. C R7024-0001 A

PAGE® INCORPORATED

PROPRIETARY PARTS LIST

The data in this proposal shall not be used or disclosed, except for evaluation purposes, provided that if a contract is awarded to this submitter as a result of or in connection with the submission of this proposal, the Government shall have the right to use or disclose this technical data to the extent provided in the contract. This restriction does not limit the Government's right to use or disclose any technical data which is not proprietary to the submitter or is obtained from another source without restriction.

DWG. NO: R6010-0081 REV: A EC NO: 3759 DATE: 3/4/94 APP:

AMENDED P/L FORMAT: 8/23/94

TITLE: HEATER ASSY, TP-65

INDEX	REFERENCE NO.	PART NO.	DESCRIPTION	FSCM	QTY
REF	1A7A1A1	6010-0081	HEATER ASSY, TP-65	17794	REF
1	1A7A1A1H1	1348-0547	SCREW, SET #8-32 X .125" LG.	17794	1
		GENERIC		ZZZ	

DWG NO. B R6010-0081 | A

REVISIONS				
LEVEL	AUTHORIZATION	DES. ENG. INITIAL	MFG. ENG. INITIAL	RELEASE APPROVAL INITIAL/DATE
A	EC 3759	C.CARDNO	M.PANT	03/04/94

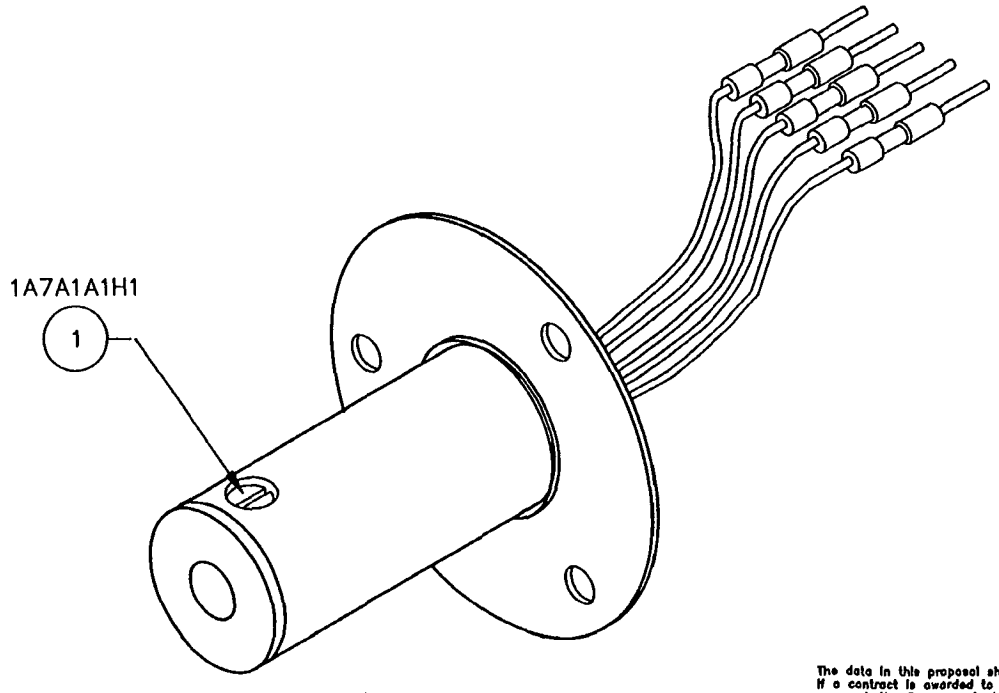

The data in this proposal shall not be used or disclosed, except for evaluation purposes, provided that if a contract is awarded to this submitter as a result of or in connection with the submission of this proposal, the Government shall have the right to use or disclose this technical data to the extent provided in the contract. This restriction does not limit the Government's right to use or disclose any technical data which is not proprietary to the submitter or is obtained from another source without restriction.

PROPRIETARY ASSEMBLY DRAWING

THIS DRAWING CONTAINS INFORMATION PROPRIETARY TO PACE INC.. ANY REPRODUCTION, DISCLOSURE OR USE OF THIS DRAWING IS EXPRESSLY PROHIBITED EXCEPT AS PACE INC. MAY OTHERWISE AGREE IN WRITING.

PACE®
PACE, Incorporated
9693 Brewers Court
Laurel, MD 20723, U.S.A.
TEL (301) 490-9860 FAX (301) 604-2180
Systems for Development, Production, and Repair of Electronic Assemblies

UNLESS OTHERWISE SPECIFIED DIMENSIONS ARE IN INCHES. DO NOT SCALE.

TOLERANCES		
2 PLACE	3 PLACE	ANGLES
± .01	± .005	± .5°

MATERIAL

FINISH

HEATER ASSY.
TP-65

F.S.C.M. NO.	DWG. NO.
17794	R6010-0081

REF. SCALE 2/1 | SK | SHEET 1 OF 1

CAD 1 INC. 301-545-3340 567825

1A7A1A1 6010-0081

PACE INCORPORATED

PROPRIETARY PARTS LIST

The data in this proposal shall not be used or disclosed, except for evaluation purposes, provided that if a contract is awarded to this submitter as a result of or in connection with the submission of this proposal, the Government shall have the right to use or disclose this technical data to the extent provided in the contract. This restriction does not limit the Government's right to use or disclose any technical data which is not proprietary to the submitter or is obtained from another source without restriction.

DWG. NO: R7925-0001 REV: A EC NO: 3759 DATE: 3/4/94 APP: M

AMENDED P/L FORMAT: 8/23/94

TITLE: THERMOTWEEZ, TT-65 W/ACCESSORIES

INDEX	REFERENCE NO.	PART NO.	DESCRIPTION	FSCM	QTY
REF	1A8	7925-0001	THERMOTWEEZ, TT-65 W/ACCESSORIES	17794	REF
1	1A8A1	7025-0001	THERMOTWEEZ, TT-65	17794	1
2	1A8MP1	1100-0234	TOOL, TIP ALIGNMENT	17794	1
3	1A8MP2	1121-0313-P1	TIP, TT, CHIP COMPONENT, .08 BLADE, PAIR	17794	1
4	1A8MP3	1121-0399-P1	TIP, TT, CHIP COMP., .16W, PR	17794	1
5	1A8MP4	1121-0417-P1	TIP, TT, .26 X .26, PR	17794	1
6	1A8MP5	1121-0425-P1	TIP, TT, .40 X .35, PR	17794	1
7	1A8MP6	1121-0452-P1	TIP, TT, .35 X .25, LCCC-24, PR	17794	1
8	1A8MP7	1121-0455-P1	TIP, TT, .85 X .85, LCCC-132, PR	17794	1
9	1A8MP8	1121-0317-P1	TIP, TT, .37 X .37, PLCC 28, PR	17794	1
10	1A8MP9	1121-0318-P1	TIP, TT, .57 X .57, PLCC 44, PR	17794	1
11	1A8MP10	1121-0416-P1	TIP, TT, .70 SOJ/SIMM, PR	17794	1

REVISIONS				
LEVEL	AUTHORIZATION	DEE FIG INITIAL	WG FIG INITIAL	MFG FAB APPROVAL INITIAL DATE
A	EC 3759	C.CARDINO	M.PANT	

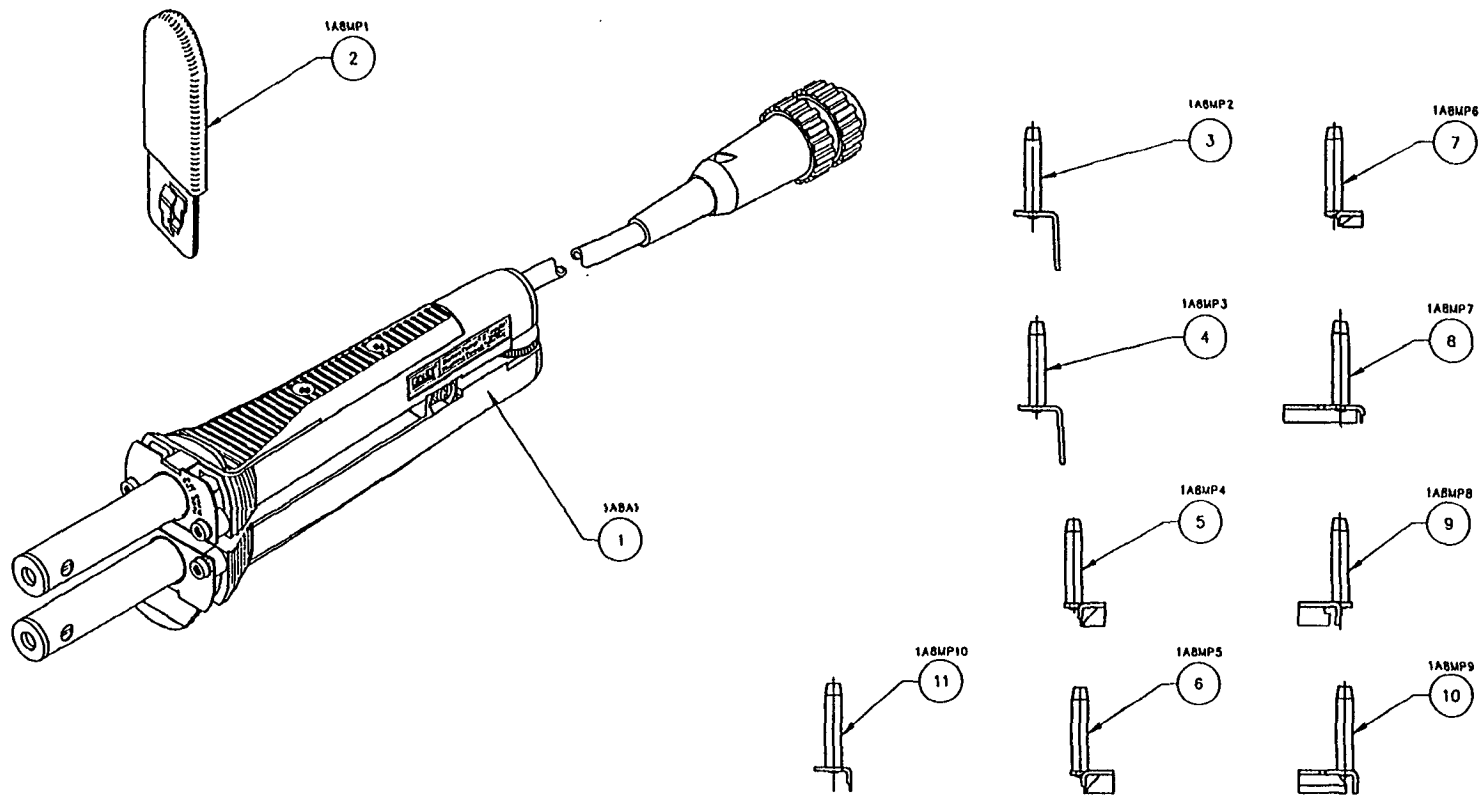

The data in this proposal shall not be used or disclosed, except for evaluation purposes, provided that if a contract is awarded to this submitter as a result of or in connection with the submission of this proposal, the Government shall have the right to use or disclose this technical data to the extent provided in the contract. This restriction does not limit the Government's right to use or disclose any technical data which is not proprietary to the submitter or is obtained from another source without restriction.

PROPRIETARY ASSEMBLY DRAWING

THIS DRAWING CONTAINS INFORMATION PROPRIETARY TO PACE INC. ANY REPRODUCTION, DISCLOSURE OR USE OF THIS DRAWING IS EXPRESSLY PROHIBITED EXCEPT AS PACE INC. MAY OTHERWISE AGREE IN WRITING.

PACE

UNLESS OTHERWISE SPECIFIED DIMENSIONS ARE IN INCHES. DO NOT SCALE.

TOLERANCES		
2 PLACE	3 PLACE	ANGLES
±.01	±.005	±.5°

MATERIAL

FINISH

THERMOTWEEZ TT-65 W/ACCESSORIES

FSCM NO.	DWG NO.
17794	R7925-0001

REF SCALE 1/1 | SK | SHEET 1 OF 1

1A8 R7925-0001

PACE® INCORPORATED

PROPRIETARY PARTS LIST

The data in this proposal shall not be used or disclosed, except for evaluation purposes, provided that if a contract is awarded to this submitter as a result of or in connection with the submission of this proposal, the Government shall have the right to use or disclose this technical data to the extent provided in the contract. This restriction does not limit the Government's right to use or disclose any technical data which is not proprietary to the submitter or is obtained from another source without restriction.

DWG. NO: R7025-0001 REV: A EC NO: 3759 DATE: 3/4/94 APP: M

AMENDED P/L FORMAT: 8/23/94

TITLE: THERMOTWEEZ, TT-65

INDEX	REFERENCE NO.	PART NO.	DESCRIPTION	FSCM	QTY
REF	1A8A1	7025-0001	THERMOTWEEZ, TT-65	17794	REF
1	1A8A1A1	6010-0083	HEATER ASSY, TT-65, W/O SENSOR	17794	1
2	1A8A1A2	6010-0082	HEATER ASSY, TT-65, W/ SENSOR	17794	1
3A	1A8A1E1	1340-0146-01 N26-40T-451-8	WIRE, 22GA.,ORANGE(QTY 1@1.25"LG.)	17794 74116	1.25
3B	1A8A1E2	1340-0146-01 N26-40T-451-8	WIRE, 22GA.,ORANGE(QTY 1@4"LG.)	17794 74116	4"
4A	1A8A1E3	1340-0146-02 N26-40T-451-6	WIRE, 22GA.,BLUE(QTY 1@1.75"LG.)	17794 74116	1.75"
4B	1A8A1E4	1340-0146-02 N26-40T-451-6	WIRE, 22GA.,BLUE(QTY 1@3.75"LG.)	17794 74116	3.75"
5A	1A8A1E5	1340-0146-03 N26-40T-451-4	WIRE, 22GA.,GREEN(QTY 1@1"LG.)	17794 74116	1"
5B	1A8A1E6	1340-0146-03 N26-40T-451-4	WIRE, 22GA.,GREEN(QTY 1@3"LG.)	17794 74116	3"
6A	1A8A1E7	1349-0253 ST-181-00	SOLDER, SLEEVE, 22-26 GAUGE	17794 06090	1
6B	1A8A1E8	1349-0253 ST-181-00	SOLDER, SLEEVE, 22-26 GAUGE	17794 06090	1
6C	1A8A1E9	1349-0253 ST-181-00	SOLDER, SLEEVE, 22-26 GAUGE	17794 06090	1
7A	1A8A1H1	1405-0395 GENERIC	SCREW, PAN HD.,#4-40 X 1/4"LG.,W/LOCKWASHER	17794 ZZZ	2
7B	1A8A1H2	1405-0395 GENERIC	SCREW, PAN HD.,#4-40 X 1/4"LG.,W/LOCKWASHER	17794 ZZZ	2
8A	1A8A1H3	1405-0637 GENERIC	SCREW, FLAT HD.,#4-40 X .50"LG.,SELF TAPPING	17794 ZZZ	2

DWG. NO: R7025-0001 REV: A EC NO: 3759 DATE: 3/4/94 APP: M

AMENDED P/L FORMAT: 8/23/94

TITLE: THERMOTWEEZ, TT-65

INDEX	REFERENCE NO.	PART NO.	DESCRIPTION	FSCM	QTY
8B	1A8A1H4	1405-0637 GENERIC	SCREW, FLAT HD.,#4-40 X .50"LG.,SELF-TAPPING	17794 ZZZ	2
9	1A8A1H5	1405-0021 GENERIC	SCREW, BINDER HD.,#4-40 X 5/8"LG.	17794 ZZZ	1
10	1A8A1H6	1415-0014 GENERIC	WASHER, FLAT,#4,.125"IDX.250"ODX.032"THK	17794 ZZZ	1
11	1A8A1H7	1410-0062 22NM-40	NUT, HEX, LOCK,#4-40	17794 06888	1
12	1A8A1H8	1349-0045 GENERIC	TYWRAP, WIRE	17794 ZZZ	2
13A	1A8A1J1	1207-0121 61622-1	RECEPTACLE, WIRE 20-24 GAUGE	17794 09769	3
13B	1A8A1J2	1207-0121 61622-1	RECEPTACLE, WIRE 20-24 GAUGE	17794 09769	3
13C	1A8A1J3	1207-0121 61622-1	RECEPTACLE, WIRE 20-24 GAUGE	17794 09769	2
14	1A8A1MP1	1119-0066	HANDLE, SENSOR SIDE	17794	1
15	1A8A1MP2	1119-0065	HANDLE, NON-SENSOR SIDE	17794	1
16	1A8A1MP3	1119-0067	GRIPPER	17794	2
17	1A8A1MP4	1119-0068	HINGE, W/SLOT	17794	1
18	1A8A1MP5	1119-0069	HINGE, W/HEX	17794	1
19	1A8A1MP6	1222-0085	WHEEL, ADJUSTMENT, .57"DIA.	17794	1
20	1A8A1MP7	1351-0531	LABEL, THERMOTWEEZ	17794	1
21	1A8A1MP8	1346-0056-01 VARGLASS TYPE HP, SIZE 7	SLEEVING, VARGLAS #7 (QTY 1@1"LG.)	17794 79074	1
22A	1A8A1MP9	1346-0067 TAT-125	TUBING, SHK., 1/4"DIA. (QTY 1@.50"LG.)	17794 06090	.50"
22B	1A8A1MP10	1346-0067 TAT-125	TUBING, SHK., 1/4"DIA. (QTY 1@.50"LG.)	17794 06090	.50"
22C	1A8A1MP11	1346-0067 TAT-125	TUBING, SHK., 1/4"DIA. (QTY 1@.50"LG.)	17794 06090	.50"
22D	1A8A1MP12	1346-0067 TAT-125	TUBING, SHK., 1/4"DIA. (QTY 1@2"LG.)	17794 06090	2"

DWG. NO: R7025-0001 REV: A EC NO: 3759 DATE: 3/4/94 APP: M

AMENDED P/L FORMAT: 8/23/94

TITLE: THERMOTWEEZ, TT-65

INDEX	REFERENCE NO.	PART NO.	DESCRIPTION	FSCM	QTY
23A	1A8A1MP13	1346-0021 FIT 221-3/32"	TUBING, SHK,. BLK.,3/32"DIA.(QTY 3@1/2"LG.EACH)	17794 92194	1.5"
23B	1A8A1MP14	1346-0021 FIT 221-3/32"	TUBING, SHK., BLK.,3/32"DIA.(QTY 3@1/2"LG.EACH)	17794 92194	1.5"
23C	1A8A1MP15	1346-0021 FIT 221-3/32"	TUBING, SHK., BLK.,3/32"DIA.(QTY 2@1/2"LG.EACH)	17794 92194	1"
24	1A8A1MP16	1221-0099 LC-022D-7	SPRING, COMPRESSION	17794 84830	1
25	1A8A1W1	1332-0151	CABLE ASSY.	17794	1

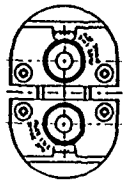

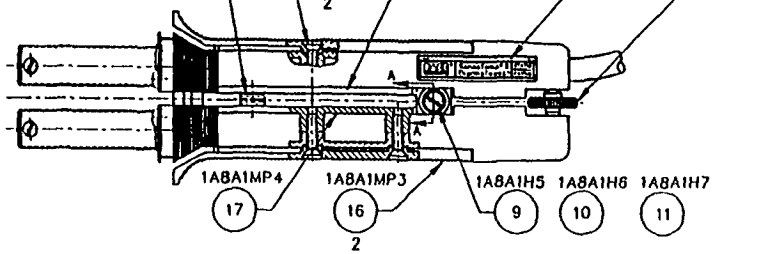

SECTION A-A

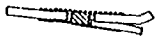

DETAIL A
SCALE 2/1
SEE NOTE 4

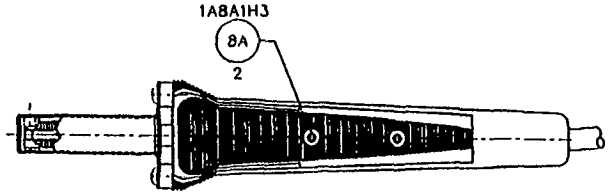

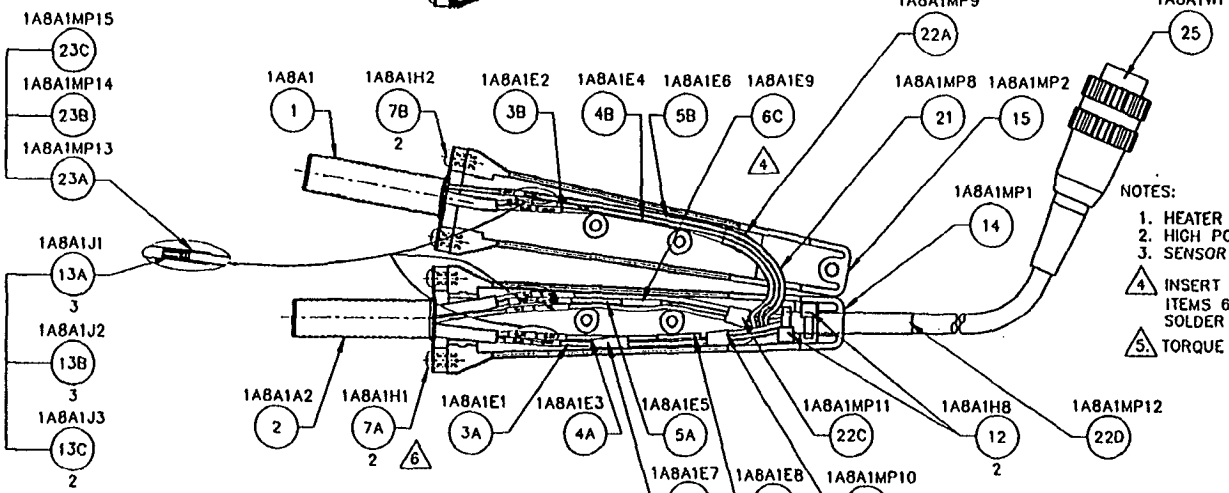

NOTES:

1. HEATER RESISTANCE 10.75Ω TO 11.9Ω PER HEATER.
2. HIGH POT HEATER AT 600V FOR 1 SECOND.
3. SENSOR RESISTANCE R=109Ω TO 110Ω
4. INSERT ENDS OF WIRES INTO EACH END OF ITEMS 6A,B,C, HEAT SHRINK TUBING AND FLOW SOLDER (SEE DETAIL "A").
5. TORQUE TO 4.5 in. oz.

ITEM NO	DIM. "X"	COLOR
18A	1.25	ORANGE
20A	1.00	GREEN
19A	1.75	BLUE
20B	3.00	GREEN
19B	3.75	BLUE
18B	4.00	ORANGE

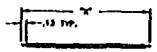

WIRE DETAIL
SCALE 1/1

The data in this proposal shall not be used or disclosed except for evaluation purposes, provided that if a contract is awarded to this submitter as a result of or in connection with the submission of this proposal, the Government shall have the right to use or disclose the technical data to the extent provided in the contract. This restriction does not limit the Government's right to use or disclose any technical data which is not proprietary to the submitter or is obtained from another source without restriction.

PROPRIETARY ASSEMBLY DRAWING

THIS DRAWING CONTAINS INFORMATION PROPRIETARY TO PACE INC. ANY REPRODUCTION, DISCLOSURE OR USE OF THIS DRAWING IS EXPRESSLY PROHIBITED EXCEPT AS PACE INC. MAY OTHERWISE AGREE IN WRITING

UNLESS OTHERWISE SPECIFIED DIMENSIONS ARE IN INCHES DO NOT SCALE

TOLERANCES		
2 PLACE	3 PLACE	ANGLES
±.01	±.005	±.5°

MATERIAL

FINISH

PACE

THERMOTWEEZ
TT-65

FSCM NO	DWG NO
17794	R7025-0001

REF. SCALE 1/1 | SK | SHEET 1 OF 1

1A8A1 R7025-0001

REVISIONS

LEVEL	AUTHORIZATION	DES TECH	DES ENG	RELEASE APPROVAL
A	EC 3739	C.CARDRO		

DWG NO R7025-0001 A

PACE INCORPORATED

PROPRIETARY PARTS LIST

The data in this proposal shall not be used or disclosed, except for evaluation purposes, provided that if a contract is awarded to this submitter as a result of or in connection with the submission of this proposal, the Government shall have the right to use or disclose this technical data to the extent provided in the contract. This restriction does not limit the Government's right to use or disclose any technical data which is not proprietary to the submitter or is obtained from another source without restriction.

DWG. NO: R6010-0083 REV: A EC NO: 3759 DATE: 3/4/94 APP:

AMENDED P/L FORMAT: 8/23/94

TITLE: HEATER ASSY, TT-65, W/O SENSOR

INDEX	REFERENCE NO.	PART NO.	DESCRIPTION	FSCM	QTY
REF	1A8A1A1	6010-0083	HEATER ASSY, TT-65, W/O SENSOR	17794	REF
1	1A8A1A1H1	1348-0547	SCREW, SET, CUP POINT ,#8-32 X .125" LG.	17794	1
		GENERIC		ZZZ	

DWG NO. B 6010-0083 | A

REVISIONS				
LEVEL	AUTHORIZATION	DES. ENG. INITIAL	MFG. ENG. INITIAL	RELEASE APPROVAL INITIAL/DATE
A	EC 3759	C.CARDNO	M.PANT	03/04/94

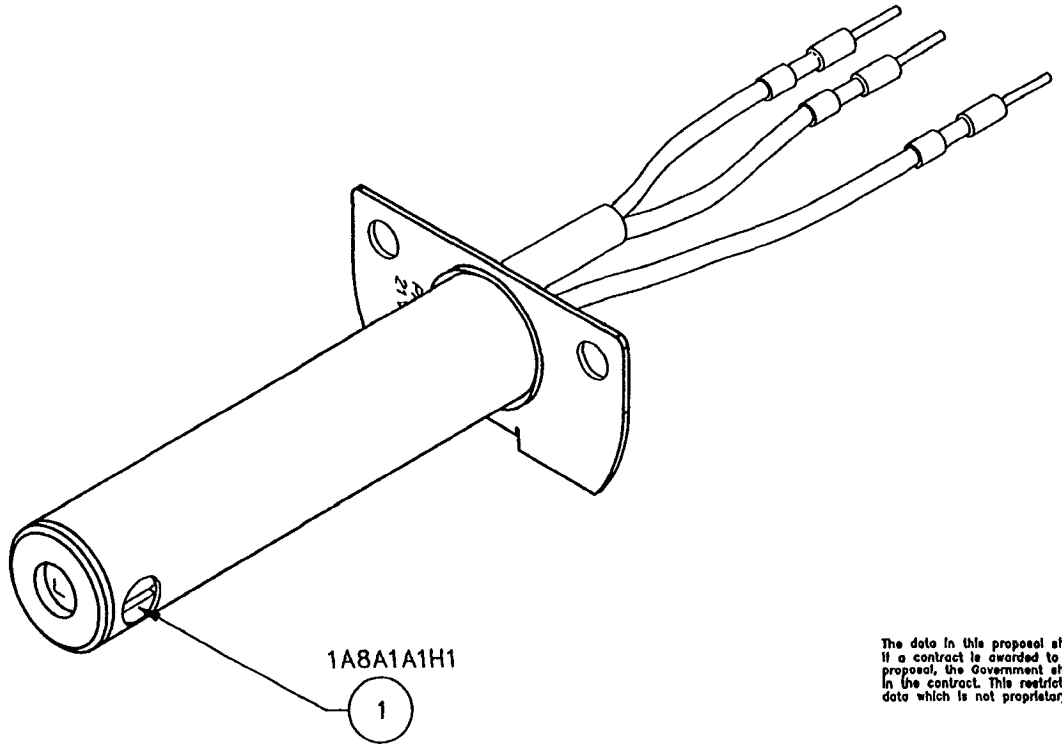

The data in this proposal shall not be used or disclosed, except for evaluation purposes, provided that if a contract is awarded to this submitter as a result of or in connection with the submission of this proposal, the Government shall have the right to use or disclose this technical data to the extent provided in the contract. This restriction does not limit the Government's right to use or disclose any technical data which is not proprietary to the submitter or is obtained from another source without restriction.

PROPRIETARY ASSEMBLY DRAWING

THIS DRAWING CONTAINS INFORMATION PROPRIETARY TO PACE INC.. ANY REPRODUCTION, DISCLOSURE OR USE OF THIS DRAWING IS EXPRESSLY PROHIBITED EXCEPT AS PACE INC. MAY OTHERWISE AGREE IN WRITING.

PACE®
PACE, Incorporated
9950 Brewers Court
Laurel, MD 20723, U.S.A.
TEL (301) 490-9660 FAX (301) 604-2160
Systems for Development, Production, and Repair of Electronic Assemblies

UNLESS OTHERWISE SPECIFIED DIMENSIONS ARE IN INCHES. DO NOT SCALE.

TOLERANCES		
2 PLACE	3 PLACE	ANGLES
± .01	± .005	± .5°

MATERIAL

FINISH

HEATER ASSY.
TT-65, W/O SENSOR

F.S.C.M. NO.	DWG. NO.
17794	R6010-0083

REF. SCALE 2/1 | SK | SHEET 1 OF 1

1A8A1A1 6010-0083

CAD 1 INC. 301-565-3340 567825

PAGE® INCORPORATED

PROPRIETARY PARTS LIST

The data in this proposal shall not be used or disclosed, except for evaluation purposes, provided that if a contract is awarded to this submitter as a result of or in connection with the submission of this proposal, the Government shall have the right to use or disclose this technical data to the extent provided in the contract. This restriction does not limit the Government's right to use or disclose any technical data which is not proprietary to the submitter or is obtained from another source without restriction.

DWG. NO: R6010-0082 REV: A EC NO: 3759 DATE: 3/4/94 APP:

AMENDED P/L FORMAT: 8/23/94

TITLE: HEATER ASSY, TT-65, W/ SENSOR

INDEX	REFERENCE NO.	PART NO.	DESCRIPTION	FSCM	QTY
REF	1A8A1A2	6010-0082	HEATER ASSY, TT-65, W/ SENSOR	17794	REF
1	1A8A1A2H1	1348-0547	SCREW, SET, CUP POINT, #8-32 X .125" LG.	17794	1

DWG NO.
B

REVISIONS				
LEVEL	AUTHORIZATION	DES. ENG. INITIAL	MFG. ENG. INITIAL	RELEASE APPROVAL INITIAL/DATE
A	EC 3759	C.CARDNO	M.PANT	03/04/

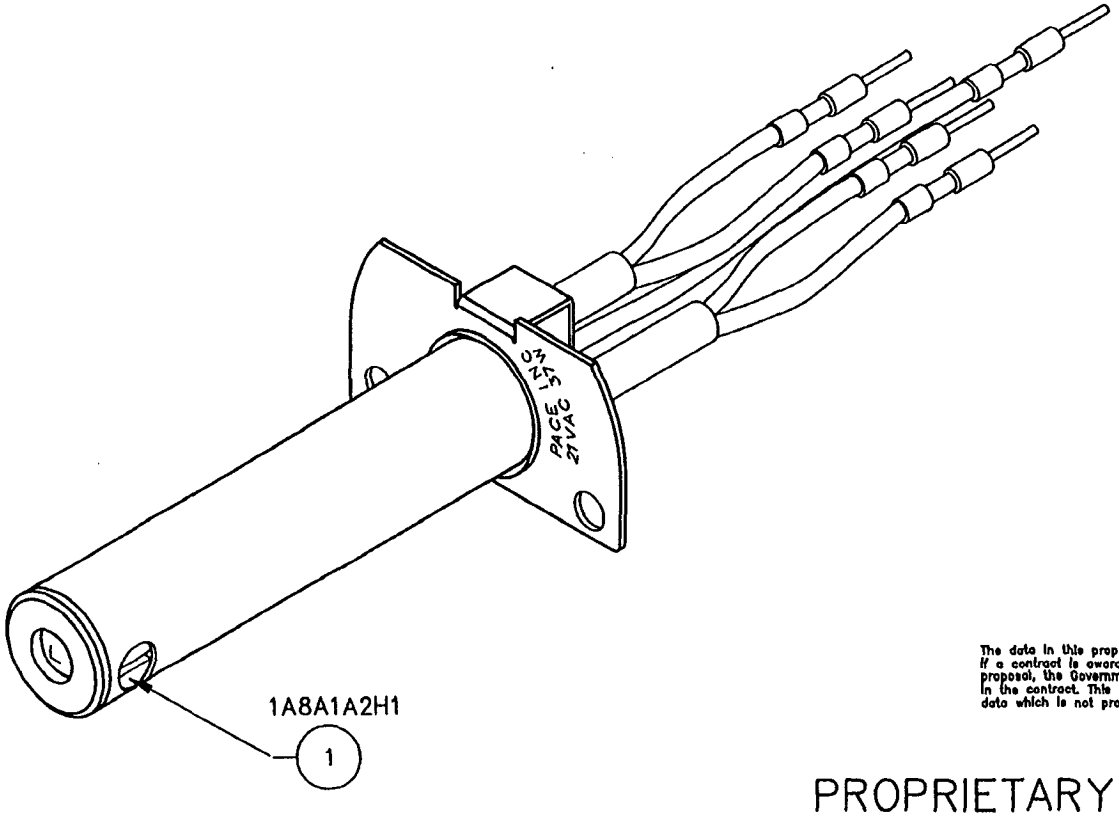

The data in this proposal shall not be used or disclosed, except for evaluation purposes, provided that if a contract is awarded to this submitter as a result of or in connection with the submission of this proposal, the Government shall have the right to use or disclose this technical data to the extent provided in the contract. This restriction does not limit the Government's right to use or disclose any technical data which is not proprietary to the submitter or is obtained from another source without restriction.

PROPRIETARY ASSEMBLY DRAWING

THIS DRAWING CONTAINS INFORMATION PROPRIETARY TO PACE INC.. ANY REPRODUCTION, DISCLOSURE OR USE OF THIS DRAWING IS EXPRESSLY PROHIBITED EXCEPT AS PACE INC. MAY OTHERWISE AGREE IN WRITING.

PACE®
PACE, Incorporated
8893 Brewers Court
Laurel, MD 20723, U.S.A.
TEL (301) 490-9860 FAX (301) 604-2180
Systems for Development, Production, and Repair of Electronic Assemblies

UNLESS OTHERWISE SPECIFIED DIMENSIONS ARE IN INCHES. DO NOT SCALE.

TOLERANCES		
2 PLACE	3 PLACE	ANGLES
± .01	± .005	± .5°

MATERIAL

FINISH

HEATER ASSY.
TT-65, W/SENSOR

F.S.C.M. NO.	DWG. NO.
17794	R6010-0082

REF. SCALE 2/1 | SK | SHEET 1 OF 1

1A8A1A2 6010-0082

CAD 1 INC. 301-565-3340 567825

PAGE® INCORPORATED

PROPRIETARY PARTS LIST

The data in this proposal shall not be used or disclosed, except for evaluation purposes, provided that if a contract is awarded to this submitter as a result of or in connection with the submission of this proposal, the Government shall have the right to use or disclose this technical data to the extent provided in the contract. This restriction does not limit the Government's right to use or disclose any technical data which is not proprietary to the submitter or is obtained from another source without restriction.

DWG. NO: R7926-0001 REV: A EC NO: 3759 DATE: 3/4/94 APP: nl

AMENDED P/L FORMAT: 8/23/94

TITLE: MICROCHINE, MC-65

INDEX	REFERENCE NO.	PART NO.	DESCRIPTION	FSCM	QTY
REF	1A9	7926-0001	MICROCHINE, MC-65	17794	REF
1	1A9A1	7026-0001	MICROCHINE, MC-65	17794	1
2	1A9A2	6005-0013	KIT, TOOL PACK, DELUXE	17794	1
3	1A9W1	1332-0159	CORD, PROBE BRAKE PATCH	17794	1
		417-8903-024		74970	
		7955-5016-10-25		18310	
		3782-24-0		ZZZ	

REVISIONS				
LEVEL	AUTHORIZATION	DES ENG INITIAL	MFG ENG INITIAL	RELEASE APPROVAL INITIAL DATE
A	EC 3703			

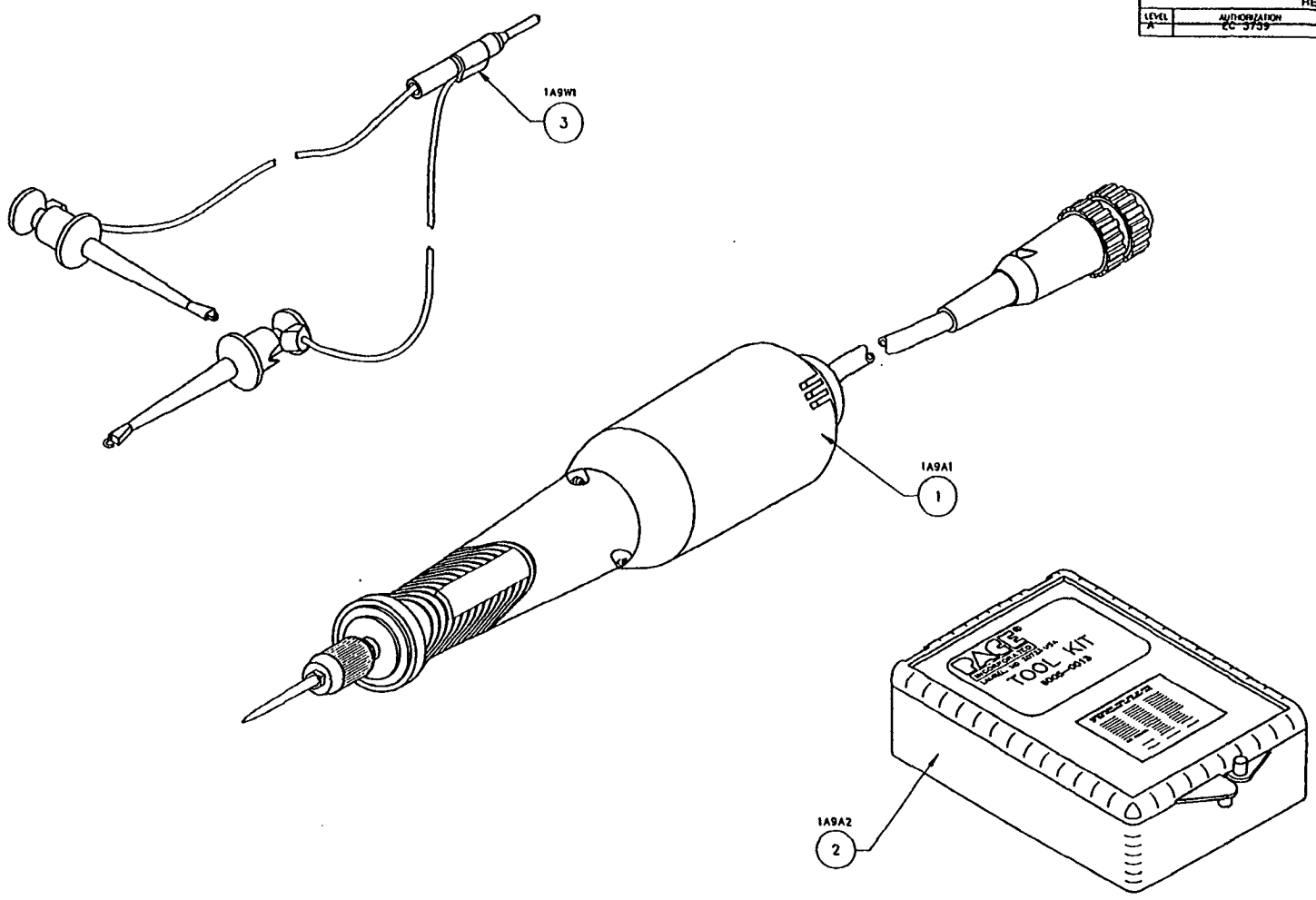

The data in this proposal shall not be used or disclosed, except for evaluation purposes, provided that if a contract is awarded to this submitter as a result of or in connection with the submission of this proposal, the Government shall have the right to use or disclose this technical data to the extent provided in the contract. This restriction does not limit the Government's right to use or disclose any technical data which is not proprietary to the submitter or is obtained from another source without restriction.

PROPRIETARY ASSEMBLY DRAWING

THIS DRAWING CONTAINS INFORMATION PROPRIETARY TO PACE INC. ANY REPRODUCTION, DISCLOSURE OR USE OF THIS DRAWING IS EXPRESSLY PROHIBITED EXCEPT AS PACE INC. MAY OTHERWISE AGREE IN WRITING

UNLESS OTHERWISE SPECIFIED DIMENSIONS ARE IN INCHES. DO NOT SCALE

TOLERANCES		
2 PLACE	3 PLACE	ANGLES
± .01	± .005	± .5°

MATERIAL

FINISH

PACE

Systems for Development, Production, and Repair of Electronic Assemblies

MICROCHINE
MC-65

FSCM NO	DWG NO
17794	R7926-0001

REF SCALE 1/1 | SK | SHEET 1 OF 1

1A9 7926-0001

DWG NO C R7926-0001 A

PAGE® INCORPORATED

PROPRIETARY PARTS LIST

The data in this proposal shall not be used or disclosed, except for evaluation purposes, provided that if a contract is awarded to this submitter as a result of or in connection with the submission of this proposal, the Government shall have the right to use or disclose this technical data to the extent provided in the contract. This restriction does not limit the Government's right to use or disclose any technical data which is not proprietary to the submitter or is obtained from another source without restriction.

DWG. NO: R7026-0001 REV: A EC NO: 3759 DATE: 3/4/94 APP: M

AMENDED P/L FORMAT: 8/23/94

TITLE: MICROCHINE, MC-65

INDEX	REFERENCE NO.	PART NO.	DESCRIPTION	FSCM	QTY
REF	1A9A1	7026-0001	MICROCHINE, MC-65	17794	REF
1	1A9A1B1	1334-0020 RS-382SH-2270	MOTOR, DC. 12V/20V	17794 ZZZ	1
2	1A9A1D1	1183-0038 1N6285A 1N6285A	DIODE, ZENER, 1N6285A	17794 8Z393 ZZZ	1
3	1A9A1E1	1340-0146-03 N26-40T-451-4	WIRE,SILICONE RUBBER,22AWG,GREEN(QTY1@2"LG)	17794 74116	2"
4	1A9A1E2	1340-0146-05 N26-40T-451-3	WIRE,SILICONE RUBBER,22AWG,RED(QTY1@2"LG.)	17794 74116	2"
5	1A9A1E3	1221-0103	SPRING, CONTACT	17794	1
6	1A9A1E4	1221-0104	SPRING, ACTUATOR	17794	1
7	1A9A1E5	1338-0068 0699-58	BRUSH, CARBON	17794 OTRH7	1
8A	1A9A1H1	1348-0566 5108-62	RING, RETAINING, INVERTED EXT.,.625"SHAFT DIA.	17794 0EUY9	1
8B	1A9A1H2.	1348-0566 5108-62	RING, RETAINING, INVERTED EXT.,.625"SHAFT DIA.	17794 0EUY9	1
9A	1A9A1H3	1415-0068 7X8-A 12020	WASHER, FLAT, .628"ID, .873"OD, .020"THK.	17794 59076	1
9B	1A9A1H4	1415-0068 7X8-A 12020	WASHER, FLAT, .628"ID, .873"OD, .020"THK.	17794 59076	1
10A	1A9A1H5	1348-0197 GENERIC	SCREW, SELF TAPPING, FIL.HD.,#2-28 X 9/32"LG.	17794 ZZZ	2
10B	1A9A1H6	1348-0197 GENERIC	SCREW, SELF TAPPING, FIL.HD.,#2-28 X 9/32"LG.	17794 ZZZ	2

DWG. NO: R7026-0001 REV: A EC NO: 3759 DATE: 3/4/94 APP: M

AMENDED P/L FORMAT: 8/23/94

TITLE: MICROCHINE, MC-65

INDEX	REFERENCE NO.	PART NO.	DESCRIPTION	FSCM	QTY
11	1A9A1L1	1185-0009	CHOKE, FILTER	17794	1
12	1A9A1MP1	1119-0072	HANDLE, BOTTOM HALF	17794	1
13	1A9A1MP2	1119-0071	HANDLE, TOP HALF	17794	1
14	1A9A1MP3	1119-0073	BUTTON	17794	1
15	1A9A1MP4	1261-0113	SHAFT	17794	1
16	1A9A1MP5	1140-0032	BOOT, MOTOR	17794	2
17	1A9A1MP6	1140-0031	BOOT, BEARING	17794	1
18	1A9A1MP7	4005-0014	COLLET, .094 DIA.	17794	1
19	1A9A1MP8	4005-0012	NUT, COLLET	17794	1
20	1A9A1MP9	1351-0540	LABEL, MICROCHINE	17794	1
21	1A9A1MP10	1140-0033	INSULATOR, SPRING	17794	2
22	1A9A1MP11	1251-0075 SSR1-8516ZZRA7P58LG39	BEARING, SHIELDED, .3125"BORE DIA.	17794 83086	1
23	1A9A1MP12	1317-0028	PAD, SPONGE RUBBER,S.S.ADH.,.50"X.50"X1/8"THK.	17794	1
24	1A9A1MP13	1289-0015 P-221	TAPE, KAPTON, 3/8"WIDE(QTY1@2"LG.)	17794 ZZZ	2"
25	1A9A1MP14	1221-0112	SPRING, .115"DIA. X .312"LG.	17794	1
26	1A9A1MP15	1346-0067 TAT-125	TUBING, SHRINK, ADH.LINED, 1/4"DIA.	17794 06090	2"
27	1A9A1MP16	1321-0243	RETAINER, CORD	17794	1
28	1A9A1MP17	1215-0142	INSULATOR, SHAFT	17794	1
29	1A9A1MP18	1346-0021 FIT 221-3/32"	TUBING, SHRINK, 3/32"DIA. (QTY4@1/2"LG.EACH)	17794 92194	2"
30	1A9A1MP19	1346-0062-02 THERMOFLEX 500, #20	SLEEVING, FIBERGLASS BRAID,NAT., #20, 1.75"LG.	17794 30890	1
31	1A9A1MP20	1140-0037	BOOT, CHOKE	17794	1
32	1A9A1W1	1332-0158	CABLE ASSY.	17794	1

BLANK

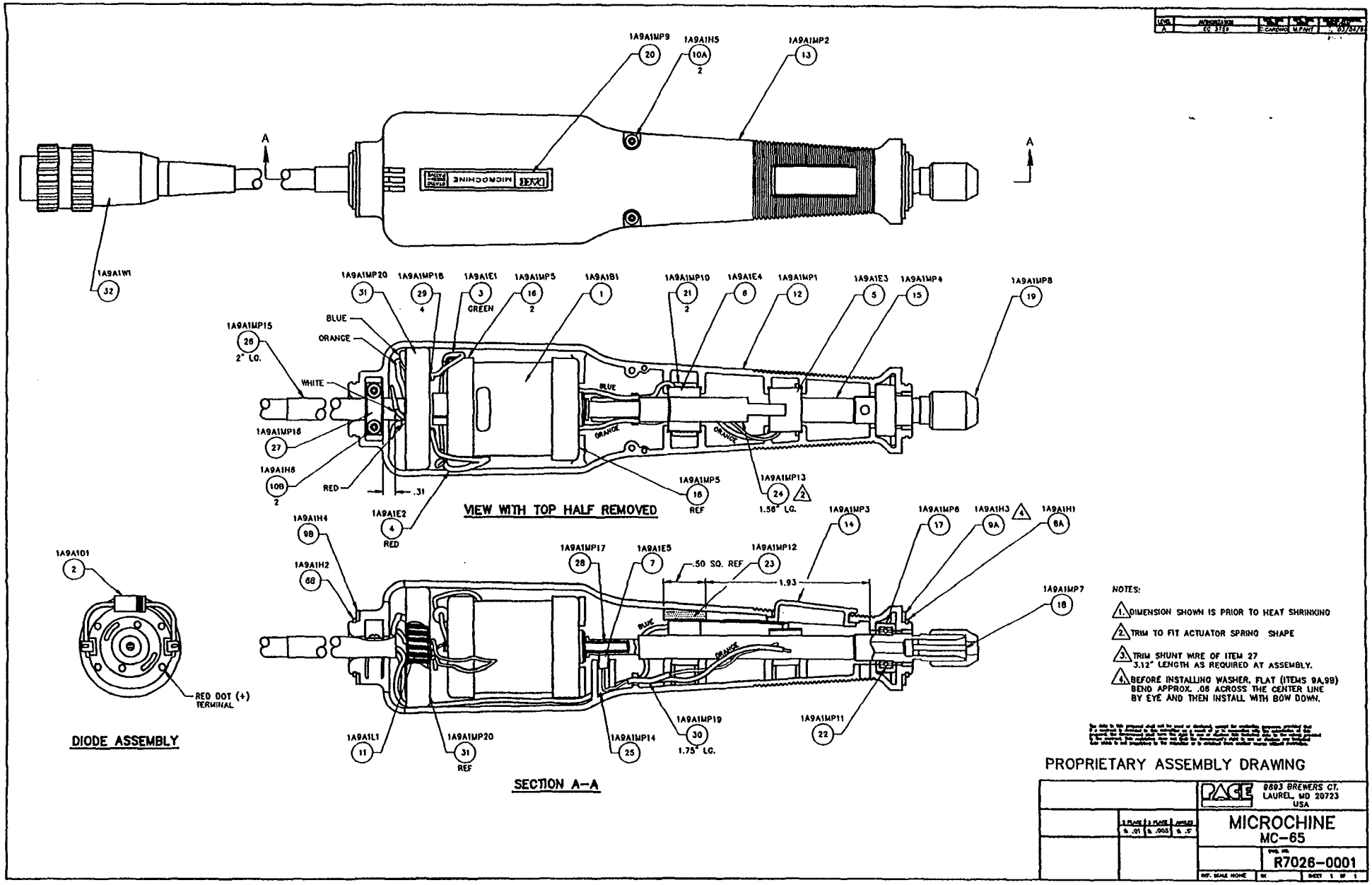

NOTES:

1. DIMENSION SHOWN IS PRIOR TO HEAT SHRINKING
2. TRIM TO FIT ACTUATOR SPRING SHAPE
3. TRIM SHUNT WIRE OF ITEM 27 3.12" LENGTH AS REQUIRED AT ASSEMBLY.
4. BEFORE INSTALLING WASHER, FLAT (ITEMS 9A,9B) BEND APPROX. .06 ACROSS THE CENTER LINE BY EYE AND THEN INSTALL WITH BOW DOWN.

PROPRIETARY ASSEMBLY DRAWING

PAGE 8893 BREWERS CT. LAUREL, MD 20723 USA

MICROCHINE
MC-65

R7026-0001

1A9A1 7026-0001

PACE® INCORPORATED

PROPRIETARY PARTS LIST

The data in this proposal shall not be used or disclosed, except for evaluation purposes, provided that if a contract is awarded to this submitter as a result of or in connection with the submission of this proposal, the Government shall have the right to use or disclose this technical data to the extent provided in the contract. This restriction does not limit the Government's right to use or disclose any technical data which is not proprietary to the submitter or is obtained from another source without restriction.

DWG. NO: R6005-0013 REV: A EC NO: 3759 DATE: 3/4/94 APP:

AMENDED P/L FORMAT: 8/23/94

TITLE: KIT, TOOL PACK, DELUXE

INDEX	REFERENCE NO.	PART NO.	DESCRIPTION	FSCM	QTY
REF	1A9A2	6005-0013	KIT, TOOL PACK, DELUXE	17794	REF
1	1A9A2MP1	1115-0001	MANDREL, W/SCREW TOP	17794	1
2	1A9A2MP2	1115-0002	MANDREL, THREADED	17794	2
3	1A9A2MP3	1127-0007	BRUSH, BRISTLE, MOUNTED	17794	1
4	1A9A2MP4	1127-0005	BRUSH, 9/16" UNMOUNTED	17794	2
5	1A9A2MP5	1127-0010	BRUSH, 3/4" UNMOUNTED	17794	1
6	1A9A2MP6	1112-0032	DRILL, 3/64"	17794	1
7	1A9A2MP7	1112-0033	DRILL, 1/16"	17794	1
8	1A9A2MP8	1112-0034	DRILL, 5/64"	17794	1
9	1A9A2MP9	1112-0035	DRILL, 3/32"	17794	1
10	1A9A2MP10	1112-0001	BALL MILL, 1/64"	17794	2
11	1A9A2MP11	1112-0002	BALL MILL, 1/32"	17794	2
12	1A9A2MP12	1112-0003	BALL MILL, 3/64"	17794	2
13	1A9A2MP13	1112-0004	BALL MILL, 1/16"	17794	2
14	1A9A2MP14	1112-0005	BALL MILL, 3/32"	17794	1
15	1A9A2MP15	1112-0006	BALL MILL, 1/8"	17794	1
16	1A9A2MP16	1112-0007	BALL MILL, 5/32"	17794	1
17	1A9A2MP17	1112-0008	BALL MILL, 3/16"	17794	1
		19 FIG 1 HP (ISO NO. 047)		27552	
18	1A9A2MP18	1112-0061	SAW, 3/32", MOUNTED	17794	1
19	1A9A2MP19	1129-0004	ABRASIVE, 5/8" RED	17794	2
20	1A9A2MP20	1129-0003	ABRASIVE, 5/8" GREEN	17794	1
21	1A9A2MP21	1129-0001	ABRASIVE, 7/8" RED	17794	2
22	1A9A2MP22	1129-0002	ABRASIVE, 7/8" GREEN	17794	1
23	1A9A2MP23	1129-0007	BULLET WHEELS, RED	17794	3
24	1A9A2MP24	1129-0008	BULLET WHEELS, GREEN	17794	3
25	1A9A2MP25	1321-0070	HOLDING PINS	17794	6
26	1A9A2MP26	6019-0002	DRILL STAND	17794	1

DWG. NO: R6005-0013 REV: A EC NO: 3759 DATE: 3/4/94 APP:

AMENDED P/L FORMAT: 8/23/94

TITLE: KIT, TOOL PACK, DELUXE

INDEX	REFERENCE NO.	PART NO.	DESCRIPTION	FSCM	QTY
27	1A9A2MP27	6019-0003	WHEEL STAND	17794	1
28	1A9A2MP28	1317-0002	FOAM PADS	17794	2

BLANK

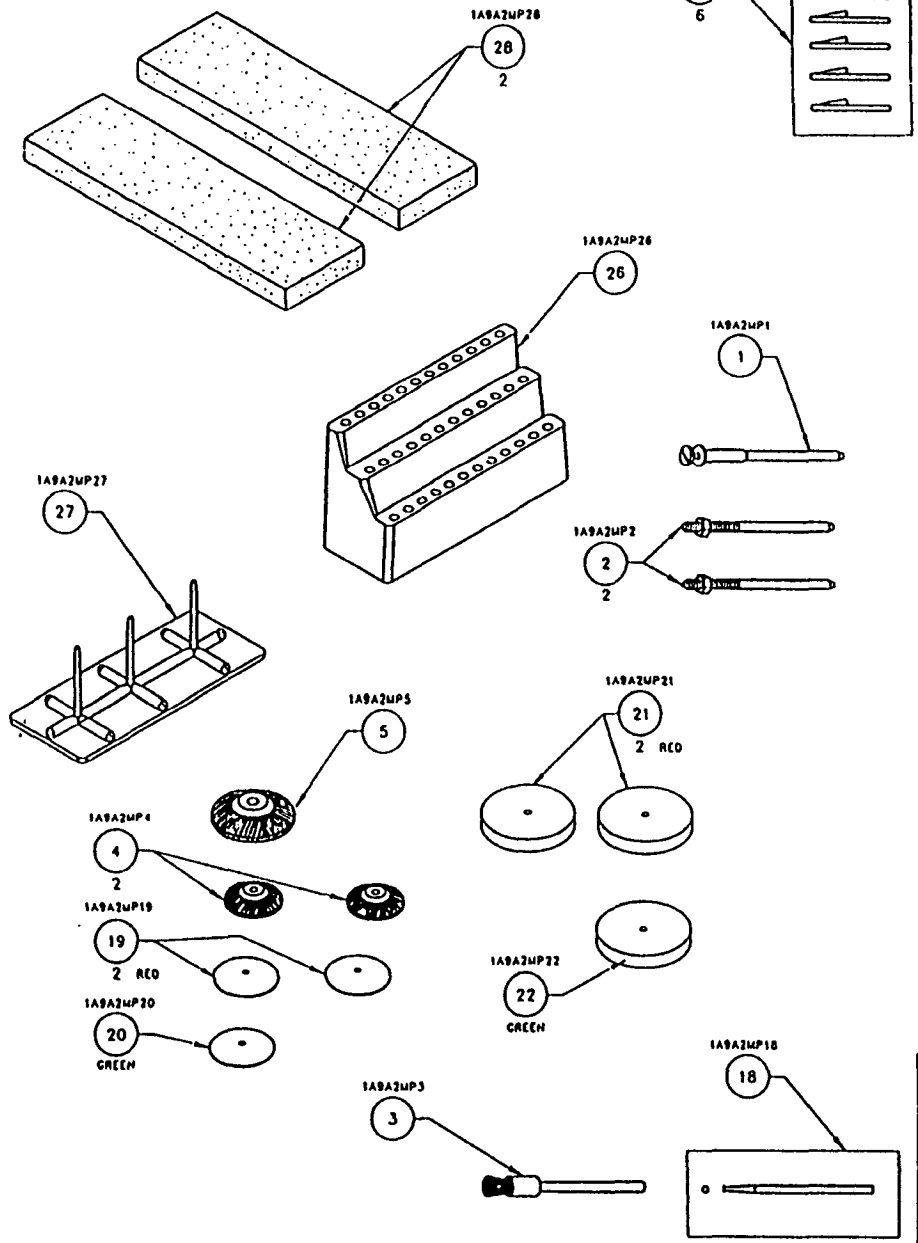

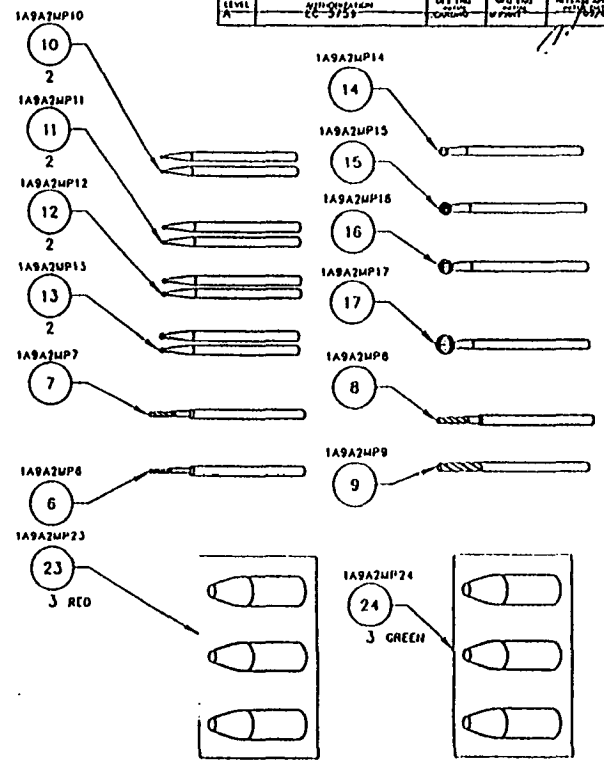

REVISIONS

LEVEL	DESCRIPTION	DATE	APPROVED	MATERIAL
A	EC-3159			

PROPRIETARY ASSEMBLY DRAWING

THIS DRAWING CONTAINS INFORMATION PROPRIETARY TO PACE INC. ANY REPRODUCTION, DISCLOSURE OR USE OF THIS DRAWING IS EXPRESSLY PROHIBITED EXCEPT AS PACE INC MAY OTHERWISE AGREE IN WRITING.

UNLESS OTHERWISE SPECIFIED DIMENSIONS ARE IN INCHES DO NOT SCALE

TOLERANCES		
2 PLACE	3 PLACE	ANGLES
±.01	±.005	±.5°

MATERIAL

FINISH

PACE

KIT, TOOL PACK
DELUXE

FSCM NO 17794

DWG NO R6005-0013

REF SCALE 1/1 SH SHEET 1 OF 1

DWG NO C26005-0013 A

PACE® INCORPORATED

PROPRIETARY PARTS LIST

The data in this proposal shall not be used or disclosed, except for evaluation purposes, provided that if a contract is awarded to this submitter as a result of or in connection with the submission of this proposal, the Government shall have the right to use or disclose this technical data to the extent provided in the contract. This restriction does not limit the Government's right to use or disclose any technical data which is not proprietary to the submitter or is obtained from another source without restriction.

DWG. NO: R7027-0001-P1

TITLE: PIK-VAC, PV-65

REV: A EC NO: 3759 DATE: 3/4/94

AMENDED P/L FORMAT: 8/23/94

B EC NO: 4366 DATE: 5/21/96

APP:

INDEX	REFERENCE NO.	PART NO.	DESCRIPTION	FSCM	QTY
REF	1A10	7027-0001-P1	PIK-VAC, PV-65	17794	REF
1	1A10A1	6993-0154	KIT, VACUUM CUP W/VAC. TIPS	17794	1
2	1A10MP1	1259-0087	DISCONNECT, QUICK CHANGE HOSE MT., MALE	17794	2
3	1A10MP2	1342-0015-08 MS 70E00B	TUBING, SILICONE, BLACK, .125ID, 54 LG.	17794 ZZZ	1
4	1A10MP3	1351-0541	LABEL, PIK-VAC	17794	1
5	1A10MP4	7027-0001	HANDLE, PIK-VAC	17794	1

DWG NO. B R7027-0001-P1 | B

REVISIONS				
LEVEL	AUTHORIZATION	DES. ENG. INITIAL	MFG. ENG. INITIAL	RELEASE APPROVAL INITIAL/DATE
A	EC 3759	C.CARDNO	M.PANT	03/04/94
B	EC 4366	C.CARDNO	M.PANT	05/21/96

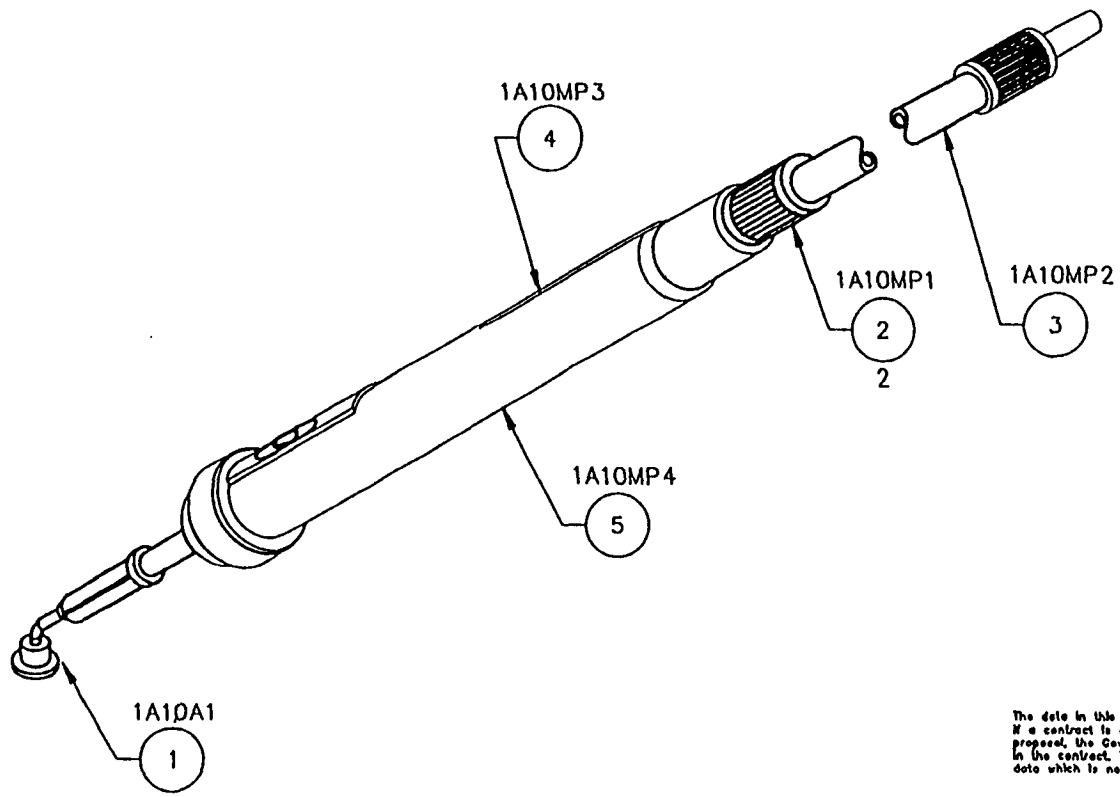

The data in this proposal shall not be used or disclosed, except for evaluation purposes, provided that if a contract is awarded to this submitter as a result of or in connection with the submission of this proposal, the Government shall have the right to use or disclose this technical data to the extent provided in the contract. This restriction does not limit the Government's right to use or disclose any technical data which is not proprietary to the submitter or is obtained from another source without restriction.

PROPRIETARY ASSEMBLY DRAWING

THIS DRAWING CONTAINS INFORMATION PROPRIETARY TO PACE INC.. ANY REPRODUCTION, DISCLOSURE OR USE OF THIS DRAWING IS EXPRESSLY PROHIBITED EXCEPT AS PACE INC. MAY OTHERWISE AGREE IN WRITING.

UNLESS OTHERWISE SPECIFIED DIMENSIONS ARE IN INCHES. DO NOT SCALE.

TOLERANCES		
2 PLACE	3 PLACE	ANGLES
± .01	± .005	± .5°

MATERIAL

FINISH

PACE
PACE, Incorporated
9002 Brewers Court
Laurel, MD 20723, U.S.A.
TEL (301) 490 9660 FAX (301) 604 2180
Systems for Development, Production, and Repair of Electronic Assemblies

PIK-VAK
PV-65

F.S.C.M. NO.	DWG. NO.
17794	R7027-0001-P1

REF. SCALE 1/1 | SK | SHEET 1 OF 1

PACE® INCORPORATED

PROPRIETARY PART'S LIST

The data in this proposal shall not be used or disclosed, except for evaluation purposes, provided that if a contract is awarded to this submitter as a result of or in connection with the submission of this proposal, the Government shall have the right to use or disclose this technical data to the extent provided in the contract. This restriction does not limit the Government's right to use or disclose any technical data which is not proprietary to the submitter or is obtained from another source without restriction.

DWG. NO: R6993-0154 REV: A EC NO: 3759 DATE: 3/4/94 APP:

AMENDED P/L FORMAT: 8/23/94

TITLE: KIT, VACUUM CUP W/VAC. TIPS

INDEX	REFERENCE NO.	PART NO.	DESCRIPTION	FSCM	QTY
REF	1A10A1	6993-0154	KIT, VACUUM CUP W/VAC. TIPS	17794	REF
1	1A10A1MP1	1121-0382	CUP, VACUUM, .175 DIA. X .197 HT.	17794	1
2	1A10A1MP2	1121-0383	CUP, VACUUM, .300 DIA. X .197 HT.	17794	1
3	1A10A1MP3	1121-0384	CUP, VACUUM, .500 DIA. X .197 HT.	17794	1
4	1A10A1MP4	1121-0413 5114-45	TIP, VACUUM, 45 DEGREE BEND, .60 ID, OLIVE	17794 0XU14	3

DWG NO. B R6993 – 0154 | A

REVISIONS				
LEVEL	AUTHORIZATION	DES. ENG. INITIAL	MFG. ENG. INITIAL	RELEASE APPROVAL INITIAL/DATE
A	EC 3759	C.CARDNO	M.PANT	03/04/94

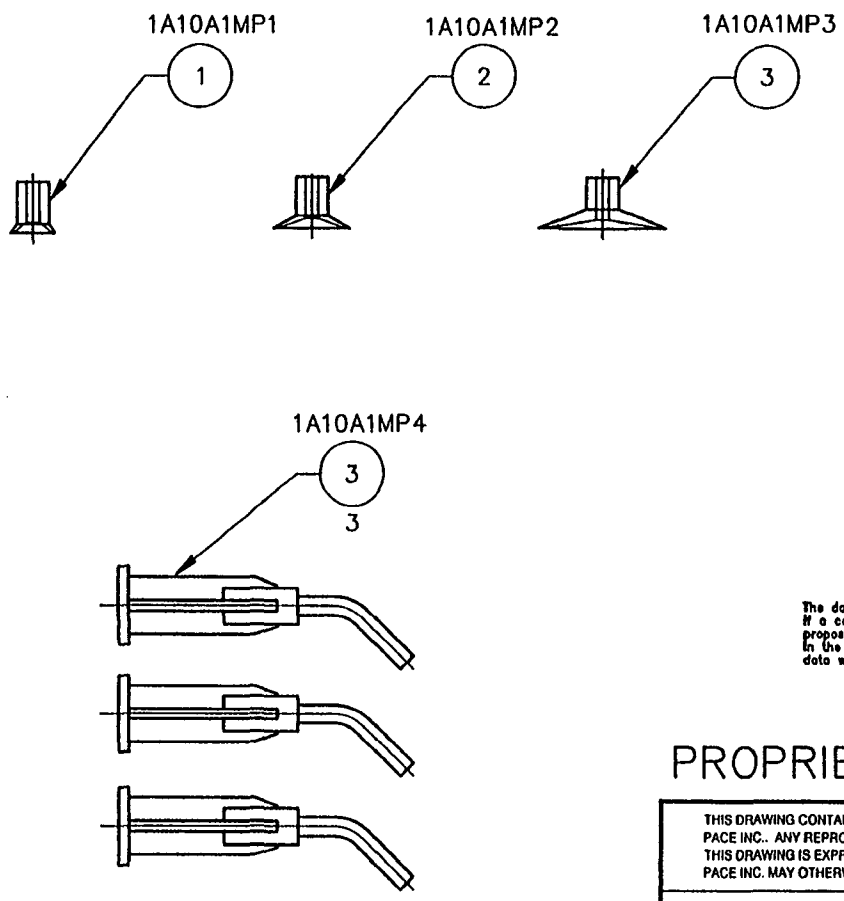

The data in this proposal shall not be used or disclosed, except for evaluation purposes, provided that if a contract is awarded to this submitter as a result of or in connection with the submission of this proposal, the Government shall have the right to use or disclose this technical data to the extent provided in the contract. This restriction does not limit the Government's right to use or disclose any technical data which is not proprietary to the submitter or is obtained from another source without restriction.

PROPRIETARY ASSEMBLY DRAWING

THIS DRAWING CONTAINS INFORMATION PROPRIETARY TO PACE INC.. ANY REPRODUCTION, DISCLOSURE OR USE OF THIS DRAWING IS EXPRESSLY PROHIBITED EXCEPT AS PACE INC. MAY OTHERWISE AGREE IN WRITING.

PACE © PACE, Incorporated
9893 Brewers Court
Laurel, MD 20723, U.S.A.
TEL (301) 490-9660 FAX (301) 604-2180
Systems for Development, Production, and Repair of Electronic Assemblies

UNLESS OTHERWISE SPECIFIED DIMENSIONS ARE IN INCHES. DO NOT SCALE.

TOLERANCES		
2 PLACE	3 PLACE	ANGLES
± .01	± .005	± .5°

MATERIAL

FINISH

KIT
VACUUM CUP W/VAC. TIPS

F.S.C.M. NO.	DWG. NO.
17794	R6993–0154

REF. SCALE 2/1 | SK | SHEET 1 OF 1

1A10A1 6993-0154

CAD 1 INC. 301-565-3340 567823

PACE INCORPORATED

PROPRIETARY PARTS LIST

The data in this proposal shall not be used or disclosed, except for evaluation purposes, provided that if a contract is awarded to this submitter as a result of or in connection with the submission of this proposal, the Government shall have the right to use or disclose this technical data to the extent provided in the contract. This restriction does not limit the Government's right to use or disclose any technical data which is not proprietary to the submitter or is obtained from another source without restriction.

DWG. NO: R7909-0005 REV: A EC NO: 3759 DATE: 3/4/94 APP:

AMENDED P/L FORMAT: 8/23/94

TITLE: RESISTWEEZ, TW-15 W/ACCESSORIES

INDEX	REFERENCE NO.	PART NO.	DESCRIPTION	FSCM	QTY
REF	1A11	7909-0005	RESISTWEEZ, TW-15 W/ACCESSORIES	17794	REF
1	1A11A1	7009-0005	RESISTWEEZ, TW-15	17794	1
2	1A11A2	6993-0105	ASS'Y, GUIDE BLOCK	17794	1
3	1A11MP1	1121-0294-P1	TIP, TW, PLCC-18	17794	1
4	1A11MP2	1121-0295-P1	TIP, TW, PLCC-20	17794	1
5	1A11MP3	1121-0296-P1	TIP, TW, PLCC-28	17794	1
6	1A11MP4	1121-0297-P1	TIP, TW, PLCC-44	17794	1
7	1A11MP5	1121-0301-P1	TIP, TW, TAPERED, FLAT, PAIR	17794	1
8	1A11MP6	1121-0006-P2	TIP, TW, FLAT	17794	1

REVISIONS				
LEVEL	AUTHORIZATION	DES ENG INITIAL	MFG ENG INITIAL	RELEASE APPROVAL SIGNAL DATE
A	EC 3759	C.CARDINO	M.PANT	03/01/89

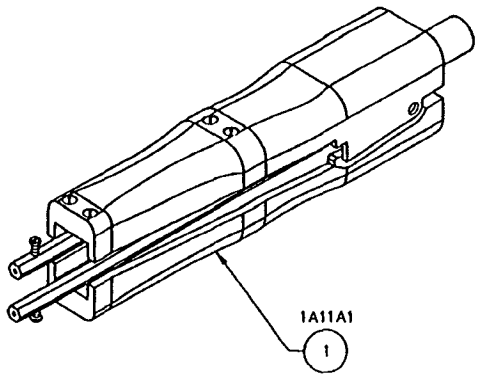

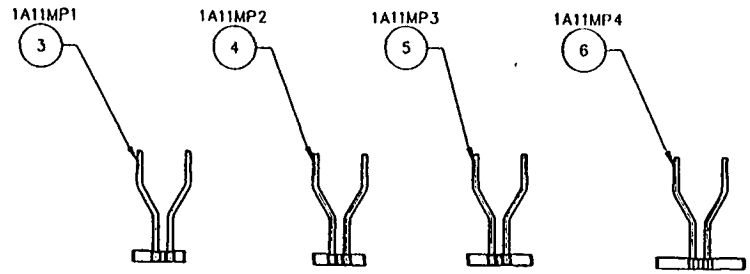

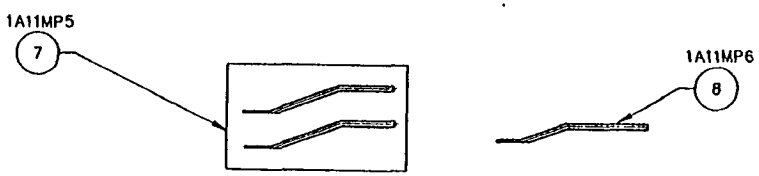

The data in this proposal shall not be used or disclosed except for evaluation purposes, provided that if a contract is awarded to this submitter as a result of or in connection with the submission of this proposal, the Government shall have the right to use or disclose the technical data to the extent provided in the contract. This restriction does not limit the Government's right to use or disclose any technical data which is not proprietary to the submitter or is obtained from another source without restriction.

DWG NO. C R7909-0005 A

PROPRIETARY ASSEMBLY DRAWING

THIS DRAWING CONTAINS INFORMATION PROPRIETARY TO PACE INC. ANY REPRODUCTION, DISCLOSURE OR USE OF THIS DRAWING IS EXPRESSLY PROHIBITED EXCEPT AS PACE INC. MAY OTHERWISE AGREE IN WRITING.

UNLESS OTHERWISE SPECIFIED DIMENSIONS ARE IN INCHES. DO NOT SCALE.

TOLERANCES		
2 PLACE	3 PLACE	ANGLES
± .01	± .005	± .5°

MATERIAL

FINISH

PACE

Systems for Development, Production, and Repair of Electronic Assemblies

RESISTWEEZ
TW-15 W/ACCESSORIES

FSCM NO	DWG NO
17794	R7909-0005

REF. SCALE 1/L | SK | SHEET 1 OF 1

1A11 7909-0005

PAGE® INCORPORATED

PROPRIETARY PARTS LIST

The data in this proposal shall not be used or disclosed, except for evaluation purposes, provided that if a contract is awarded to this submitter as a result of or in connection with the submission of this proposal, the Government shall have the right to use or disclose this technical data to the extent provided in the contract. This restriction does not limit the Government's right to use or disclose any technical data which is not proprietary to the submitter or is obtained from another source without restriction.

DWG. NO: R7009-0005 REV: A EC NO: 3759 DATE: 3/4/94 APP:

AMENDED P/L FORMAT: 8/23/94

TITLE: RESISTWEEZ, TW-15

INDEX	REFERENCE NO.	PART NO.	DESCRIPTION	FSCM	QTY
REF	1A11A1	7009-0005	RESISTWEEZ, TW-15	17794	REF
1	1A11A1H1	1405-0029 GENERIC	SCREW, BINDER HD.,#6-32 X 3/8"LG.	17794 ZZZ	1
2	1A11A1H2	1221-0026 7X9-1W027704	WASHER, SPRING, CURVED	17794 59076	1
3A	1A11A1H3	1405-0198 GENERIC	SCREW, FIL.HD.,#2-56 X 9/32"LG.	17794 ZZZ	2
3B	1A11A1H4	1405-0198 GENERIC	SCREW, FIL.HD.,#2-56 X 9/32"LG.	17794 ZZZ	2
4A	1A11A1H5	1405-0182 GENERIC	SCREW, FIL.HD., #2-56 X 5/32" LG.	17794 ZZZ	1
4B	1A11A1H6	1405-0182 GENERIC	SCREW, FIL.HD., #2-56 X 5/32" LG.	17794 ZZZ	1
5	1A11A1MP1	1119-0060	HANDLE, WITH CONNECTOR	17794	1
6A	1A11A1MP2	1261-0035	BRASS ROD	17794	1
6B	1A11A1MP3	1261-0035	BRASS ROD	17794	1
7	1A11A1MP4	1119-0015	HANDLE ADJUSTMENT BLOCK	17794	1
8	1A11A1MP5	1275-0002	HINGE PIVOT ROD	17794	1
9	1A11A1MP6	1221-0034 LC-026B-12	SPRING, COMPRESSION	17794 84830	1
10A	1A11A1MP7	1289-0015 P-221	TAPE, KAPTON, 1MIL.THK.X3/8"W(1 PC.@.75"LG.)	17794 ZZZ	0.75
10B	1A11A1MP8	1289-0015 P-221	TAPE, KAPTON, 1MIL.THK.X3/8"W(1 PC.@.75"LG.)	17794 ZZZ	0.75
10C	1A11A1MP9	1289-0015 P-221	TAPE, KAPTON, 1MIL.THK.X3/8"W(1 PC.@.50"LG.)	17794 ZZZ	0.50
10D	1A11A1MP10	1289-0015 P-221	TAPE, KAPTON, 1MIL.THK.X3/8"W(1 PC.@.50"LG.)	17794 ZZZ	0.50

DWG. NO: R7009-0005 REV: A EC NO: 3759 DATE: 3/4/94 APP:

AMENDED P/L FORMAT: 8/23/94

TITLE: RESISTWEEZ, TW-15

INDEX	REFERENCE NO.	PART NO.	DESCRIPTION	FSCM	QTY
11	1A11A1MP11	1351-0211	LABEL, RESISTWEEZ	17794	1
12	1A11A1MP12	1119-0059	HANDLE, WITH INSERT	17794	1

BLANK

REVISIONS				
LEVEL	AUTHORIZATION	DES ENG INITIAL	QA ENG INITIAL	RELEASE APPROVAL INITIAL DATE
A	EC 3759	C.CARDHO	M.PANT	03/01/94

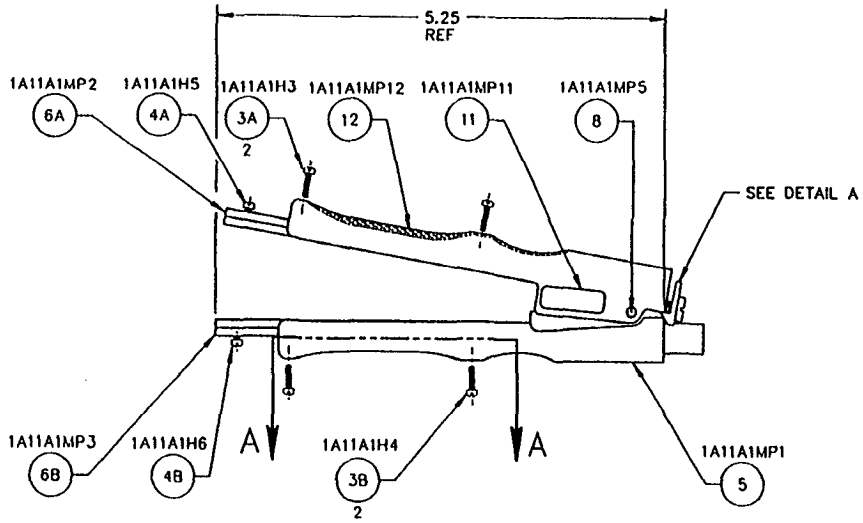

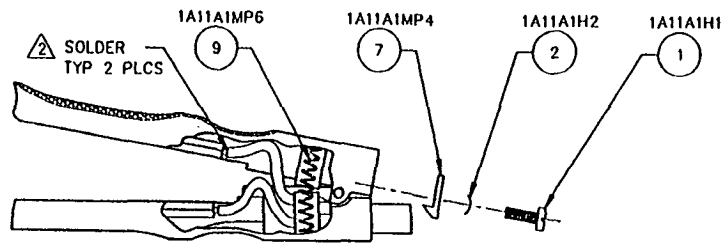

DETAIL A

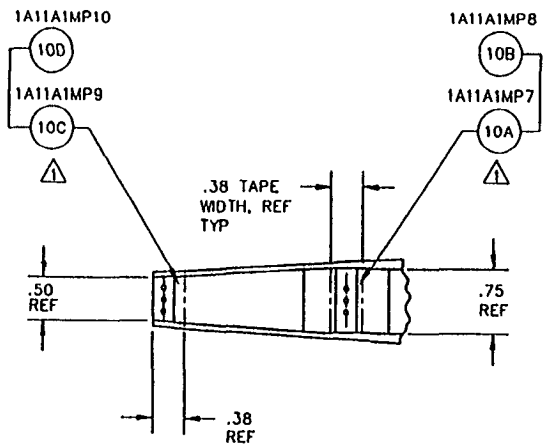

SECTION A–A

NOTES:

1. AFTER INSTALLING TAPE (ITEMS10A,B,C,D), PUNCH THROUGH TAPE USING A SHARP POINT TOOL WHERE SCREWS ARE TO BE INSERTED
2. SOLDER CONNECTOR WIRES INTO HEX RODS (ITEMS 6A,B) PRIOR TO ASSEMBLING INTO HANDLE

The data in this proposal shall not be used or disclosed, except for evaluation purposes, provided that if a contract is awarded to this submitter as a result of or in connection with the submission of this proposal, the Government shall have the right to use or disclose this technical data to the extent provided in the contract. This restriction does not limit the Government's right to use or disclose any technical data which is not proprietary to the submitter or is obtained from another source without restriction.

PROPRIETARY ASSEMBLY DRAWING

THIS DRAWING CONTAINS INFORMATION PROPRIETARY TO PACE INC. ANY REPRODUCTION, DISCLOSURE OR USE OF THIS DRAWING IS EXPRESSLY PROHIBITED EXCEPT AS PACE INC. MAY OTHERWISE AGREE IN WRITING.

UNLESS OTHERWISE SPECIFIED DIMENSIONS ARE IN INCHES. DO NOT SCALE

TOLERANCES		
2 PLACE	3 PLACE	ANGLES
± .01	± .005	± .5°

MATERIAL

FINISH

PACE

RESISTWEEZ
TW–15

FSCM NO	DWG NO
17794	R7009–0005

REF SCALE 1/1 | SK | SHEET 1 OF 1

DWG NO. CR7009-0005 A

3A11A1 7009-0005

PACE® INCORPORATED

PROPRIETARY PARTS LIST

The data in this proposal shall not be used or disclosed, except for evaluation purposes, provided that if a contract is awarded to this submitter as a result of or in connection with the submission of this proposal, the Government shall have the right to use or disclose this technical data to the extent provided in the contract. This restriction does not limit the Government's right to use or disclose any technical data which is not proprietary to the submitter or is obtained from another source without restriction.

DWG. NO: R6993-0105 REV: A EC NO: 3759 DATE: 3/4/94 APP:

AMENDED P/L FORMAT: 8/23/94

TITLE: ASS'Y, GUIDE BLOCK

INDEX	REFERENCE NO.	PART NO.	DESCRIPTION	FSCM	QTY
REF	1A11A2 1A14A2	6993-0105	ASS'Y, GUIDE BLOCK	17794	REF

DWG NO. B R6993-0105 | A

REVISIONS				
LEVEL	AUTHORIZATION	DES. ENG. INITIAL	MFG. ENG. INITIAL	RELEASE APPROVAL INITIAL/DATE
A	EC 3759	C.CARDNO	M.PANT	3/4/9

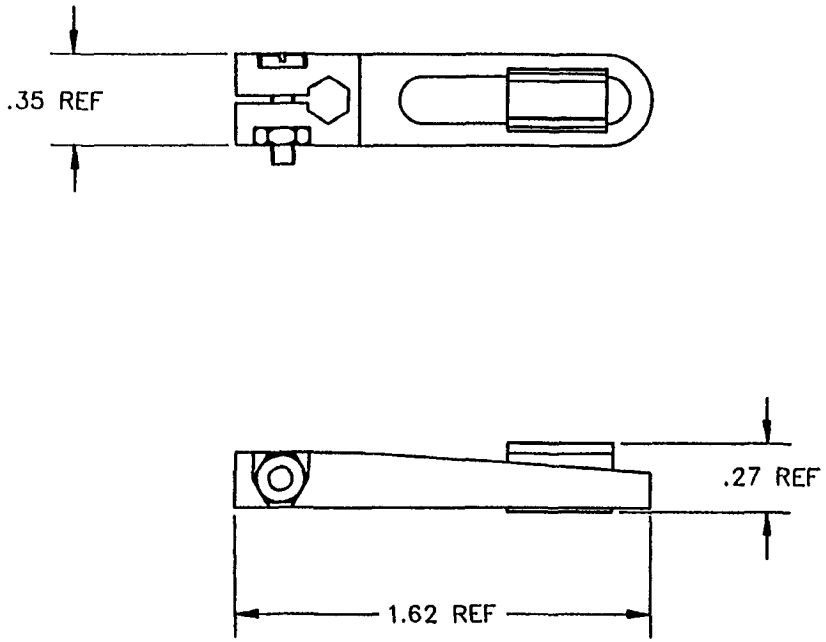

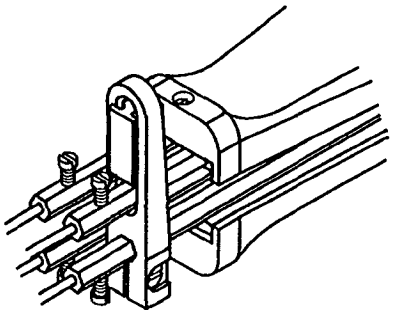

The data in this proposal shall not be used or disclosed, except for evaluation purposes, provided that if a contract is awarded to this submitter as a result of or in connection with the submission of this proposal, the Government shall have the right to use or disclose this technical data to the extent provided in the contract. This restriction does not limit the Government's right to use or disclose any technical data which is not proprietary to the submitter or is obtained from another source without restriction.

PROPRIETARY ASSEMBLY DRAWING

THIS DRAWING CONTAINS INFORMATION PROPRIETARY TO PACE INC.. ANY REPRODUCTION, DISCLOSURE OR USE OF THIS DRAWING IS EXPRESSLY PROHIBITED EXCEPT AS PACE INC. MAY OTHERWISE AGREE IN WRITING.

UNLESS OTHERWISE SPECIFIED DIMENSIONS ARE IN INCHES. DO NOT SCALE.

TOLERANCES		
2 PLACE	3 PLACE	ANGLES
± .01	± .005	± .5°

MATERIAL

FINISH

PACE (®) PACE, Incorporated
9893 Brewers Court
Laurel, MD 20723, U.S.A.
TEL (301) 490-9660 FAX (301) 604-2160
Systems for Development, Production, and Repair of Electronic Assemblies

ASSEMBLY
GUIDE BLOCK

F.S.C.M. NO.	DWG. NO.
17794	R6993-0105

REF. SCALE 1/1 | SK | SHEET 1 OF 1

1A14A2 6993-0105
1A11A2 6993-0105

CAD 1 INC. 301-565-3340 567825

PACE® INCORPORATED

PROPRIETARY PARTS LIST

The data in this proposal shall not be used or disclosed, except for evaluation purposes, provided that if a contract is awarded to this submitter as a result of or in connection with the submission of this proposal, the Government shall have the right to use or disclose this technical data to the extent provided in the contract. This restriction does not limit the Government's right to use or disclose any technical data which is not proprietary to the submitter or is obtained from another source without restriction.

DWG. NO: R7012-0002-P1 REV: A EC NO: 3759 DATE: 3/4/94 APP:

AMENDED P/L FORMAT: 8/23/94

TITLE: STRIPTWEEZ HANDPIECE, TS-15

INDEX	REFERENCE NO.	PART NO.	DESCRIPTION	FSCM	QTY
REF	1A12	7012-0002-P1	STRIPTWEEZ HANDPIECE, TS-15	17794	1
1A	1A12H1	1405-0005 GENERIC	SCREW, BINDER HD.,#2-56 X 3/8"LG.	17794 ZZZ	1
1B	1A12H2	1405-0005 GENERIC	SCREW, BINDER HD.,#2-56 X 3/8"LG.	17794 ZZZ	2
2A	1A12H3	1405-0106 GENERIC	SCREW, SEMS.,#2-56 X 3/16"LG.	17794 ZZZ	4
2B	1A12H4	1405-0106 GENERIC	SCREW, SEMS, #2-56 X 3/16" LG.	17794 ZZZ	4
3	1A12H5	1405-0029 GENERIC	SCREW, BINDER HD.,#6-32 X 3/8"LG.	17794 ZZZ	1
4	1A12H6	1221-0026 7X9-1W027704	SPRING WASHER, CURVED	17794 59076	1
5A	1A12H7	1405-0198 GENERIC	SCREW, FIL.HD.,#2-56 X 9/32"LG.	17794 ZZZ	4
5B	1A12H8	1405-0198 GENERIC	SCREW, FIL.HD.,#2-56 X 9/32"LG.	17794 ZZZ	4
6	1A12MP1	1119-0058	HANDLE, WITH CONNECTOR	17794	1
7A	1A12MP2	1261-0007	BRASS ROD	17794	2
7B	1A12MP3	1261-0007	BRASS ROD	17794	2
8A	1A12MP4	4012-0005	STOP BLOCK	17794	1
8B	1A12MP5	4012-0005	STOP BLOCK	17794	2
9	1A12MP6	1119-0015	HANDLE ADJUSTMENT BLOCK	17794	1
10	1A12MP7	1275-0002	HINGE PIVOT ROD	17794	1
11A	1A12MP8	1289-0015 P-221	TAPE, KAPTON, 1MIL.THK.X3/8"W(1 PC.@.75"LG.)	17794 ZZZ	0.75
11B	1A12MP9	1289-0015 P-221	TAPE, KAPTON, 1MIL.THK.X3/8"W(1 PC.@.75"LG.)	17794 ZZZ	0.75

DWG. NO: R7012-0002-P1 REV: A EC NO: 3759 DATE: 3/4/94 APP:

AMENDED P/L FORMAT: 8/23/94

TITLE: STRIPTWEEZ HANDPIECE, TS-15

INDEX	REFERENCE NO.	PART NO.	DESCRIPTION	FSCM	QTY
11C	1A12MP10	1289-0015 P-221	TAPE, KAPTON, 1MIL.THK.X3/8"W(1 PC.@.50"LG.)	17794 ZZZ	0.50
11D	1A12MP11	1289-0015 P-221	TAPE, KAPTON, 1MIL.THK.X3/8"W(1 PC.@.50"LG.)	17794 ZZZ	0.50
12	1A12MP12	1351-0210	LABEL, STRIPTWEEZ	17794	1
13	1A12MP13	1119-0019	HANDLE, WITH INSERT	17794	1
14	1A12MP14	1221-0021	SPRING, COMPRESSION	17794	1
15	1A12MP15	1221-0032	CONDUCTOR SPRING	17794	2
16	1A12MP16	1121-0003-P2	BLADE, TS, STRIPPER	17794	1

BLANK

REVISIONS				
LEVEL	AUTHORIZATION	DES ENG INITIAL	MFG ENG INITIAL	RELEASE/APPROVAL INITIAL/DATE
A	EC 3759	C.CARDINO	M.PANT	03/01/94

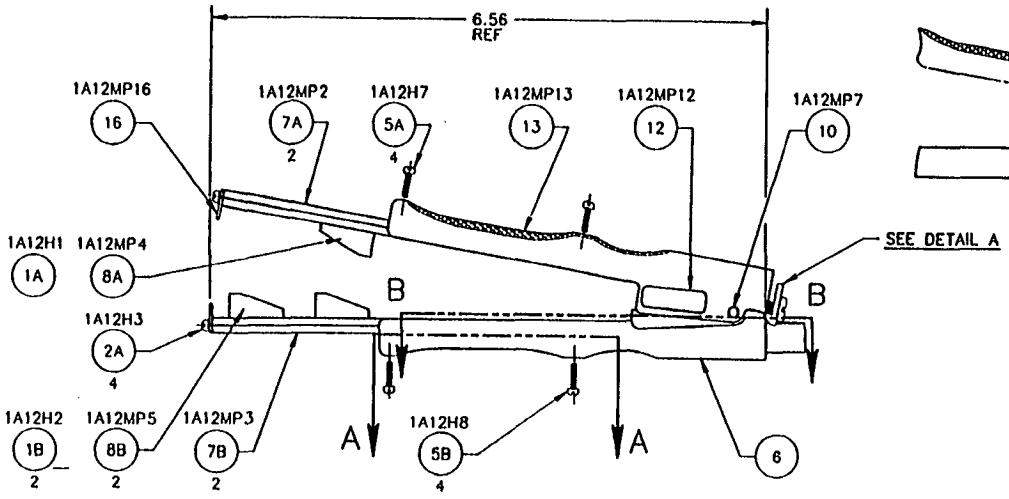

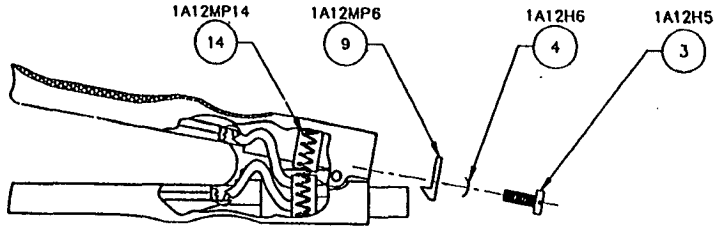

DETAIL A

SCALE: 1/1

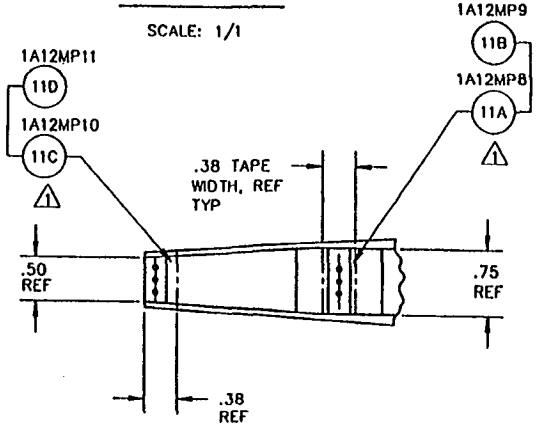

SECTION A–A

SCALE: 1/1

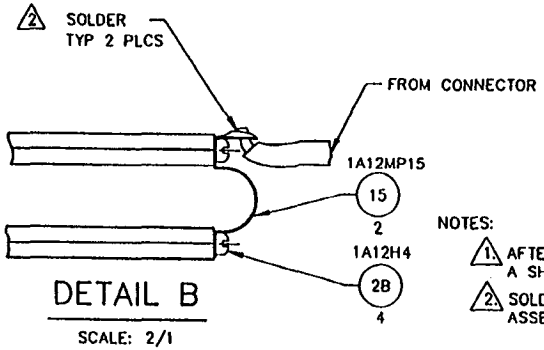

DETAIL B

SCALE: 2/1

NOTES:

1. AFTER INSTALLING TAPE (ITEMS 11A,B,C,D), PUNCH THROUGH TAPE USING A SHARP POINT TOOL WHERE SCREWS ARE TO BE INSERTED.
2. SOLDER CONNECTOR WIRES INTO HEX RODS (ITEMS 6A,B), PRIOR TO ASSEMBLING INTO HANDLE.

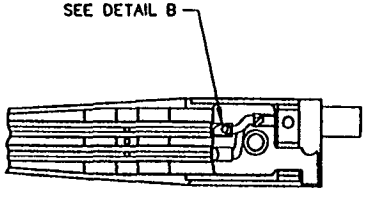

SECTION B–B

SCALE: 1/1

The data in this proposal shall not be used or disclosed, except for evaluation purposes, provided that if a contract is awarded to this submitter as a result of or in connection with the submission of this proposal, the Government shall have the right to use or disclose this technical data to the extent provided in the contract. This restriction does not limit the Government's right to use or disclose any technical data which is not proprietary to the submitter or is obtained from another source without restriction.

PROPRIETARY ASSEMBLY DRAWING

THIS DRAWING CONTAINS INFORMATION PROPRIETARY TO PACE INC. ANY REPRODUCTION, DISCLOSURE OR USE OF THIS DRAWING IS EXPRESSLY PROHIBITED EXCEPT AS PACE INC. MAY OTHERWISE AGREE IN WRITING.

UNLESS OTHERWISE SPECIFIED DIMENSIONS ARE IN INCHES. DO NOT SCALE.

TOLERANCES		
2 PLACE	3 PLACE	ANGLES
± .01	± .005	± .5°

MATERIAL

FINISH

PACE®

STRIPTWEEZ
HANDPIECE,TS–15

FSCM NO.	DWG NO.
17794	R7012–0002–P1

REF. SCALE 1/1 | SH | SHEET 1 OF 1

DWG NO. C.R.7012-0002-P1 A

3A12 7012-0002-P1

PACE INCORPORATED

PROPRIETARY PARTS LIST

The data in this proposal shall not be used or disclosed, except for evaluation purposes, provided that if a contract is awarded to this submitter as a result of or in connection with the submission of this proposal, the Government shall have the right to use or disclose this technical data to the extent provided in the contract. This restriction does not limit the Government's right to use or disclose any technical data which is not proprietary to the submitter or is obtained from another source without restriction.

DWG. NO: R7913-0004-02 REV: A EC NO: 3759 DATE: 3/4/94 APP: M

AMENDED P/L FORMAT: 8/23/94

TITLE: LAPFLO, LF-15 W/ACCESSORIES

INDEX	REFERENCE NO.	PART NO.	DESCRIPTION	FSCM	QTY
REF	1A13	7913-0004-02	LAPFLO, LF-15 W/ACCESSORIES	17794	REF
1	1A13A1	7013-0004-02	LAPFLO, LF-15	17794	1
2	1A13MP1	6000-0008	TIP, SINGLE POINT, LAPFLO	17794	1
3	1A13MP2	6000-0009	TIP, THERMOPART REMOVAL	17794	1
4	1A13MP3	1121-0300-P1	TIP, LF, MULTIPOINT, .44	17794	1
5	1A13MP4	1121-0298-P1	TIP, LF, MULTIPOINT SMD, .270	17794	1
6	1A13MP5	1121-0299-P1	TIP, LF, MULTIPOINT SMD, .540	17794	1

DWG NO.
B

REVISIONS				
LEVEL	AUTHORIZATION	DES. ENG. INITIAL	MFG. ENG. INITIAL	RELEASE APPROVAL INITIAL/DATE
A	EC 3759	C.CARONO	M.PANT	03/04/94

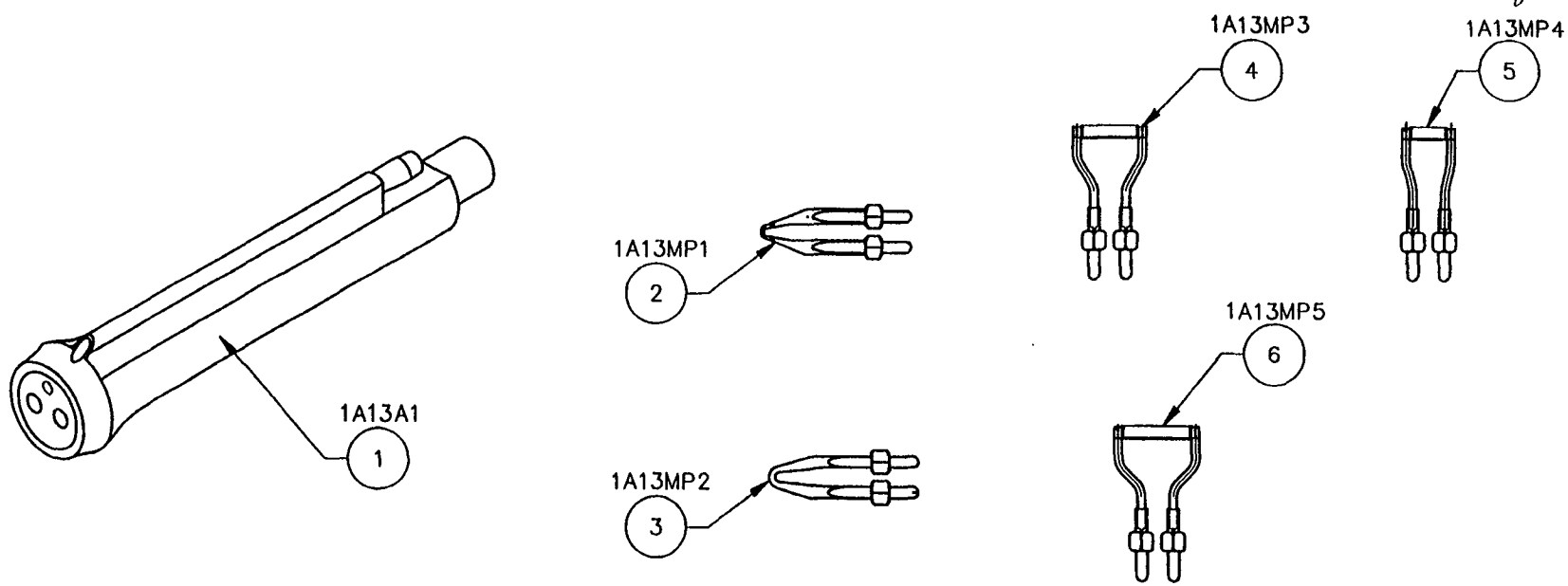

The data in this proposal shall not be used or disclosed, except for evaluation purposes, provided that if a contract is awarded to this submitter as a result of or in connection with the submission of this proposal, the Government shall have the right to use or disclose this technical data to the extent provided in the contract. This restriction does not limit the Government's right to use or disclose any technical data which is not proprietary to the submitter or is obtained from another source without restriction.

PROPRIETARY ASSEMBLY DRAWING

THIS DRAWING CONTAINS INFORMATION PROPRIETARY TO PACE INC.. ANY REPRODUCTION, DISCLOSURE OR USE OF THIS DRAWING IS EXPRESSLY PROHIBITED EXCEPT AS PACE INC. MAY OTHERWISE AGREE IN WRITING.

UNLESS OTHERWISE SPECIFIED DIMENSIONS ARE IN INCHES. DO NOT SCALE.

TOLERANCES		
2 PLACE	3 PLACE	ANGLES
± .01	± .005	± .5°

MATERIAL

FINISH

PACE®
PACE, Incorporated
9893 Brewers Court
Laurel, MD 20723, U.S.A.
TEL (301) 490-9660 FAX (301) 604-2180
Systems for Development, Production, and Repair of Electronic Assemblies

LAPFLO
LF-15 W/ACCESSORIES

F.S.C.M. NO.	DWG. NO.
17794	R7913-0004-02

REF. SCALE 1/1 | SK | SHEET 1 OF 1

PACE® INCORPORATED

PROPRIETARY PARTS LIST

The data in this proposal shall not be used or disclosed, except for evaluation purposes, provided that if a contract is awarded to this submitter as a result of or in connection with the submission of this proposal, the Government shall have the right to use or disclose this technical data to the extent provided in the contract. This restriction does not limit the Government's right to use or disclose any technical data which is not proprietary to the submitter or is obtained from another source without restriction.

DWG. NO: R7013-0004-02 REV: A EC NO: 3759 DATE: 3/4/94 APP:

AMENDED P/L FORMAT: 8/23/94

TITLE: LAPFLO, LF-15

INDEX	REFERENCE NO.	PART NO.	DESCRIPTION	FSCM	QTY
REF	1A13A1	7013-0004-02	LAPFLO, LF-15	17794	REF
1	1A13A1MP1	1119-0070	HANDLE	17794	1
2	1A13A1MP2	1321-0018	CONTACT HOLDER	17794	1
3	1A13A1MP3	1207-0016	RECEPTACLE	17794	2
4	1A13A1MP4	1215-0010	SPACERS	17794	2
5	1A13A1MP5	1221-0031	SPRING,C	17794	2
6	1A13A1MP6	1351-0214	LABEL, LAPFLO	17794	1

DWG NO.
B

REVISIONS				
LEVEL	AUTHORIZATION	DES. ENG. INITIAL	MFG. ENG. INITIAL	RELEASE APPROVAL INITIAL/DATE
A	EC 3759	C.CARDNO	M.PANT	03/04/94

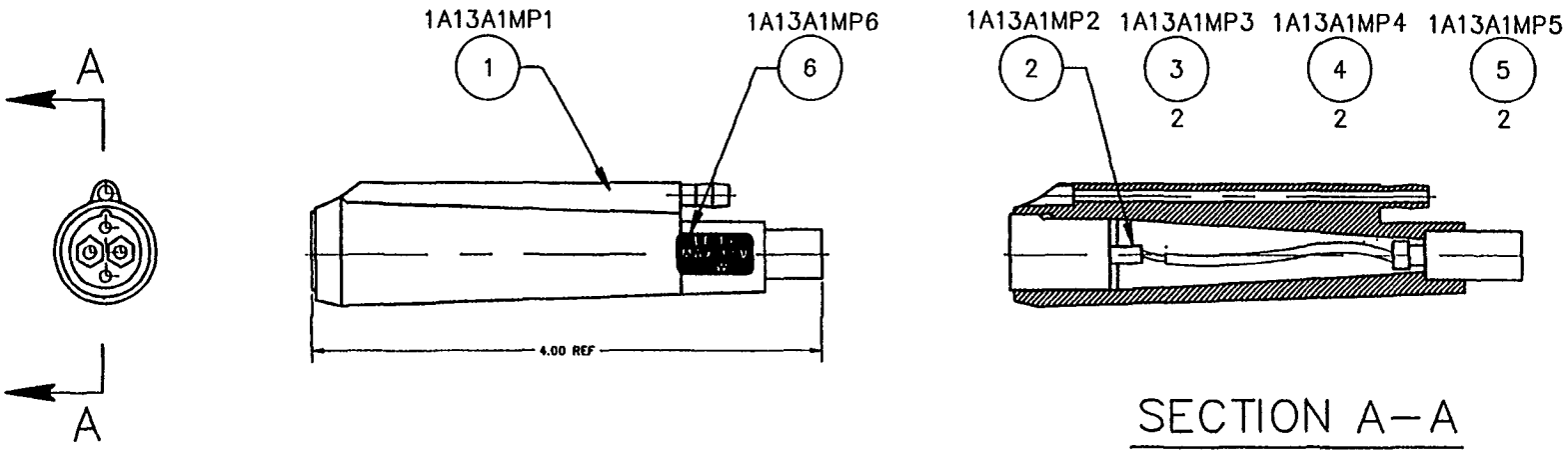

SECTION A–A

The data in this proposal shall not be used or disclosed, except for evaluation purposes, provided that *if a contract is awarded to this submitter as a result of or in connection with the submission of this* proposal, the Government shall have the right to use or disclose this technical data to the extent provided in the contract. This restriction does not limit the Government's right to use or disclose any technical data which is not proprietary to the submitter or is obtained from another source without restriction.

PROPRIETARY ASSEMBLY DRAWING

THIS DRAWING CONTAINS INFORMATION PROPRIETARY TO PACE INC.. ANY REPRODUCTION, DISCLOSURE OR USE OF THIS DRAWING IS EXPRESSLY PROHIBITED EXCEPT AS PACE INC. MAY OTHERWISE AGREE IN WRITING.

UNLESS OTHERWISE SPECIFIED DIMENSIONS ARE IN INCHES. DO NOT SCALE.

TOLERANCES		
2 PLACE	3 PLACE	ANGLES
± .01	± .005	± .5°

MATERIAL

FINISH

PACE (R) PACE, Incorporated
9892 Brewers Court
Laurel, MD 20723, U.S.A.
TEL (301) 490 9860 FAX (301) 604-2180
Systems for Development, Production, and Repair of Electronic Assemblies

LAPFLO (LF–15)

F.S.C.M. NO.	DWG. NO.
17794	R7013–0004–02

REF. SCALE 1/1 | SK | SHEET 1 OF 1

CAD 1 INC. 301-565-3340 367825

1A13A1 7013-0004-02

PACE® INCORPORATED

PROPRIETARY PARTS LIST

The data in this proposal shall not be used or disclosed, except for evaluation purposes, provided that if a contract is awarded to this submitter as a result of or in connection with the submission of this proposal, the Government shall have the right to use or disclose this technical data to the extent provided in the contract. This restriction does not limit the Government's right to use or disclose any technical data which is not proprietary to the submitter or is obtained from another source without restriction.

DWG. NO: R7920-0001 REV: A EC NO: 3759 DATE: 3/4/94 APP:

AMENDED P/L FORMAT: 8/23/94

TITLE: CONDUCTWEEZ HANDPIECE, CT-15 W/ACC.

INDEX	REFERENCE NO.	PART NO.	DESCRIPTION	FSCM	QTY
REF	1A14	7920-0001	CONDUCTWEEZ HANDPIECE, CT-15 W/ACC.	17794	REF
1	1A14A1	7020-0001	CONDUCTWEEZ HANDPIECE, CT-15	17794	1
2	1A14A2	6993-0105	ASS'Y, GUIDE BLOCK	17794	1
3	1A14MP1	1121-0286-P1	TIP, CT, .080 CHISEL, SET	17794	1
4	1A14MP2	1121-0271-P1	TIP, CT, SMD, .480, PAIR	17794	1
5	1A14MP3	1121-0270-P1	TIP, CT, SMD, .600, PAIR	17794	1
6	1A14MP4	1121-0293-P1	TIP, CT, SOIC 24/28, PAIR	17794	1
7	1A14MP5	1121-0269-P1	TIP, CT, SMD .210, SET	17794	1

REVISIONS				
LEVEL	AUTHORIZATION	DES ENG INITIAL	MFG ENG INITIAL	RELEASE APPROVAL INITIAL/DATE
A	EC 3759	C.CARDINO	M.PANT	// 03/04/84

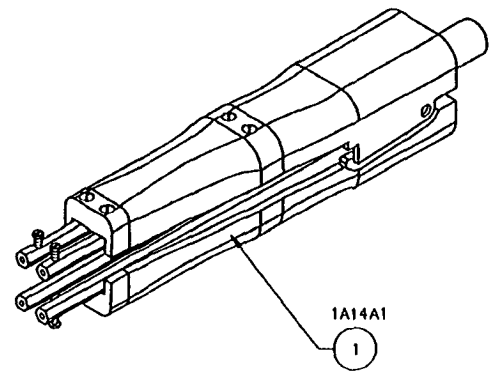

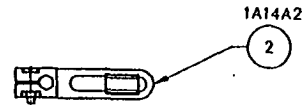

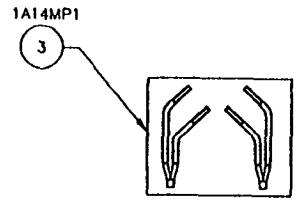

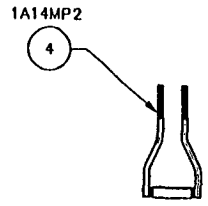

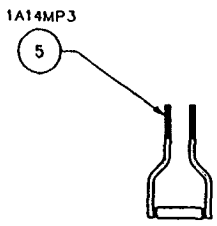

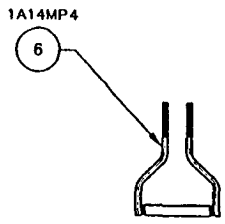

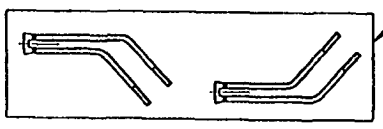

The data in this proposal shall not be used or disclosed, except for evaluation purposes, provided that if a contract is awarded to this submitter as a result of or in connection with the submission of this proposal, the Government shall have the right to use or disclose this technical data to the extent provided in the contract. This restriction does not limit the Government's right to use or disclose any technical data which is not proprietary to the submitter or is obtained from another source without restriction.

PROPRIETARY ASSEMBLY DRAWING

THIS DRAWING CONTAINS INFORMATION PROPRIETARY TO PACE INC. ANY REPRODUCTION, DISCLOSURE OR USE OF THIS DRAWING IS EXPRESSLY PROHIBITED EXCEPT AS PACE INC. MAY OTHERWISE AGREE IN WRITING

PACE® PACE Incorporated 5800 Bounds Court Laurel MD 20723 U.S.A. TEL (301) 490-9400 FAX (301) 490-2140

Editors for Orthopaedic Production and Repair of Electronic Assemblies

UNLESS OTHERWISE SPECIFIED DIMENSIONS ARE IN INCHES. DO NOT SCALE

TOLERANCES		
2 PLACE	3 PLACE	ANGLES
± .01	± .005	± .5°

MATERIAL

FINISH

CONDUCTWEEZ HANDPIECE CT-15 W/ACCESSORIES

FSCM NO	DWG NO
17794	R7920-0001

REF SCALE 1/1 | SK | SHEET 1 OF 1

1A14 A R7920-0001

DWG NO C R7920-0001 A

143

PAGE® INCORPORATED

PROPRIETARY PARTS LIST

The data in this proposal shall not be used or disclosed, except for evaluation purposes, provided that if a contract is awarded to this submitter as a result of or in connection with the submission of this proposal, the Government shall have the right to use or disclose this technical data to the extent provided in the contract. This restriction does not limit the Government's right to use or disclose any technical data which is not proprietary to the submitter or is obtained from another source without restriction.

DWG. NO: R7020-0001 REV: A EC NO: 3759 DATE: 3/4/94 APP:

AMENDED P/L FORMAT: 8/23/94

TITLE: CONDUCTWEEZ HANDPIECE, CT-15

INDEX	REFERENCE NO.	PART NO.	DESCRIPTION	FSCM	QTY
REF	1A14A1	7020-0001	CONDUCTWEEZ HANDPIECE, CT-15	17794	REF
1	1A14A1H1	1221-0026 7X9-1W027704	WASHER, SPRING, CURVED	17794 59076	1
2	1A14A1H2	1405-0029 GENERIC	SCREW, BINDER HD., #6-32 X 3/8" LG.	17794 ZZZ	1
3A	1A14A1H3	1405-0182 GENERIC	SCREW, FIL.HD., #2-56 X 5/32" LG.	17794 ZZZ	2
3B	1A14A1H4	1405-0182 GENERIC	SCREW, FIL.HD., #2-56 X 5/32" LG.	17794 ZZZ	2
4A	1A14A1H5	1405-0198 GENERIC	SCREW, FIL.HD., #2-56 X 9/32" LG.	17794 ZZZ	4
4B	1A14A1H6	1405-0198 GENERIC	SCREW, FIL.HD., #2-56 X 9/32" LG.	17794 ZZZ	4
5A	1A14A1H7	1405-0106 GENERIC	SCREW, SEMS, #2-56 X 3/16" LG.	17794 ZZZ	2
5B	1A14A1H8	1405-0106 GENERIC	SCREW, SEMS, #2-56 X 3/16" LG.	17794 ZZZ	2
6	1A14A1MP1	1119-0058	HANDLE WITH CONNECTOR	17794	1
7	1A14A1MP2	1119-0015	HANDLE ADJUSTMENT BLOCK	17794	1
8	1A14A1MP3	1275-0002	HINGE PIVOT ROD	17794	1
9A	1A14A1MP4	1261-0021	BRASS ROD	17794	2
9B	1A14A1MP5	1261-0021	BRASS ROD	17794	2
10	1A14A1MP6	1221-0032	SPRING CONDUCTOR	17794	2
11	1A14A1MP7	1221-0021	SPRING, COMPRESSION	17794	1
12	1A14A1MP8	1351-0212	LABEL, CONDUCTWEEZ	17794	1

DWG. NO: R7020-0001 REV: A EC NO: 3759 DATE: 3/4/94 APP:

AMENDED P/L FORMAT: 8/23/94

TITLE: CONDUCTWEEZ HANDPIECE, CT-15

INDEX	REFERENCE NO.	PART NO.	DESCRIPTION	FSCM	QTY
13A	1A14A1MP9	1289-0015 P-221	TAPE, KAPTON, 1MIL.THK.X3/8"W(1 PC.@.75"LG.)	17794 ZZZ	0.75
13B	1A14A1MP10	1289-0015 P-221	TAPE, KAPTON, 1MIL.THK.X3/8"W(1 PC.@.75"LG.)	17794 ZZZ	0.75
13C	1A14A1MP11	1289-0015 P-221	TAPE, KAPTON, 1MIL.THK.X3/8"W(1 PC.@.50"LG.)	17794 ZZZ	0.50
13D	1A14A1MP12	1289-0015 P-221	TAPE, KAPTON, 1MIL.THK.X3/8"W(1 PC.@.50"LG.)	17794 ZZZ	0.50
14	1A14A1MP13	1119-0019	HANDLE, WITH INSERT	17794	1

BLANK

REVISIONS				
LEVEL	AUTHORIZATION	DES ENG INITIAL	MFG ENG INITIAL	RELEASE/APPROVAL INITIALS/DATE
A	EC 3759	C.CARDINO	W.HART	03/01/94

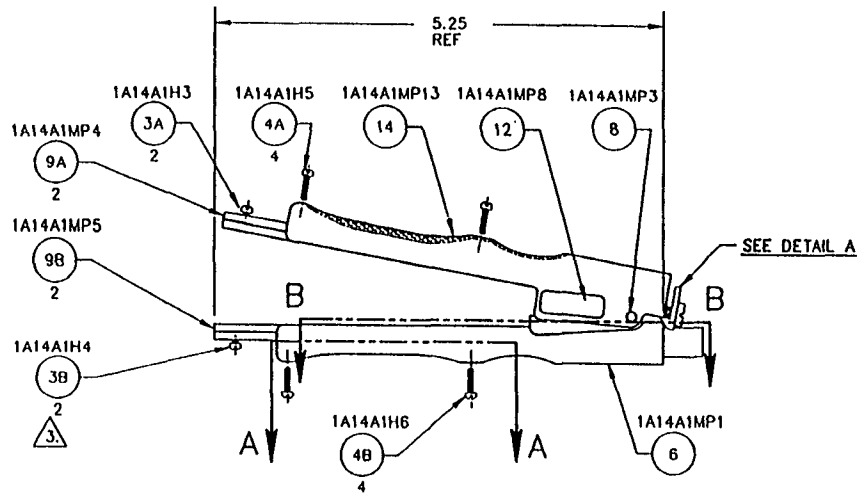

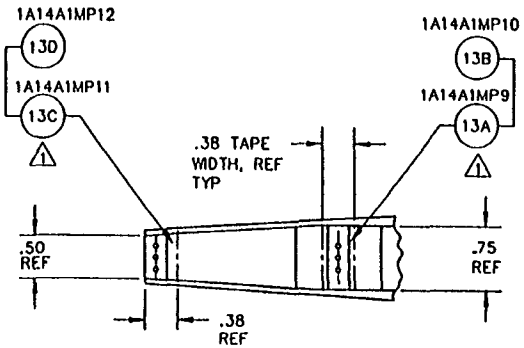

SECTION A–A

SCALE: 1/1

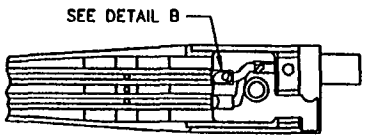

SECTION B–B

SCALE: 1/1

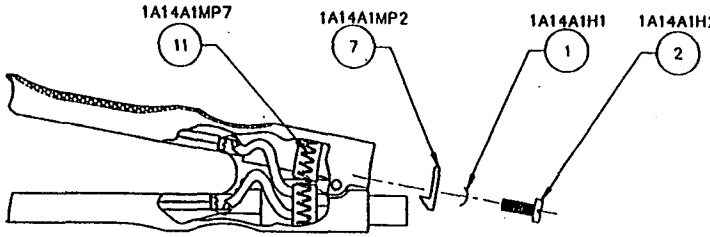

DETAIL A

SCALE: 1/1

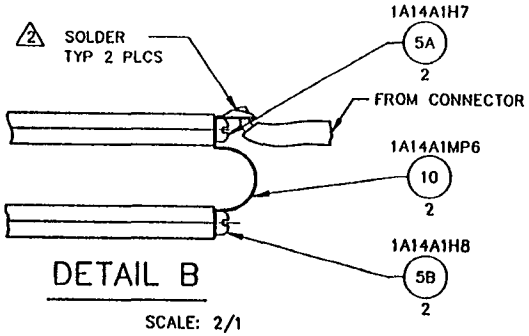

DETAIL B

SCALE: 2/1

NOTES:

1. AFTER INSTALLING TAPE (ITEMS13A,B,C,D), PUNCH THROUGH TAPE USING A SHARP POINT TOOL WHERE SCREWS ARE TO BE INSERTED.
2. SOLDER CONNECTOR WIRES INTO HEX RODS (ITEMS 9A,B), PRIOR TO ASSEMBLING INTO HANDLE.
3. MAKE CERTAIN SCREWS (ITEMS 3A,B) ARE FULLY SEATED IN RODS (ITEMS 9A,B), TO AVOID LOSS DURING SHIPMENT.

The data in this proposal shall not be used or disclosed, except for evaluation purposes, provided that if a contract is awarded to this submitter as a result of or in connection with the submission of this proposal, the Government shall have the right to use or disclose this technical data to the extent provided in the contract. This restriction does not limit the Government's right to use or disclose any technical data which is not proprietary to the submitter or is obtained from another source without restriction.

PROPRIETARY ASSEMBLY DRAWING

THIS DRAWING CONTAINS INFORMATION PROPRIETARY TO PACE INC. ANY REPRODUCTION, DISCLOSURE OR USE OF THIS DRAWING IS EXPRESSLY PROHIBITED EXCEPT AS PACE INC. MAY OTHERWISE AGREE IN WRITING.

UNLESS OTHERWISE SPECIFIED DIMENSIONS ARE IN INCHES DO NOT SCALE.

TOLERANCES		
2 PLACE	3 PLACE	ANGLES
± .01	± .005	± .5°

MATERIAL

FINISH

PACE

CONDUCTWEEZ
HANDPIECE, CT-15

FSCM NO	DWG NO
17794	R7020-0001

REF SCALE 1/1 | SIZE | SHEET 1 OF 1

1A14A1 7020-0001

DWG NO. CR7020-0001 A

PACE® INCORPORATED

PROPRIETARY PARTS LIST

The data in this proposal shall not be used or disclosed, except for evaluation purposes, provided that if a contract is awarded to this submitter as a result of or in connection with the submission of this proposal, the Government shall have the right to use or disclose this technical data to the extent provided in the contract. This restriction does not limit the Government's right to use or disclose any technical data which is not proprietary to the submitter or is obtained from another source without restriction.

DWG. NO: R6993-0152 REV: A EC NO: 3759 DATE: 3/4/94 APP:

AMENDED P/L FORMAT: 8/23/94

TITLE: KIT, PASTE DISPENSER

INDEX	REFERENCE NO.	PART NO.	DESCRIPTION	FSCM	QTY
REF	1A15	6993-0152	KIT, PASTE DISPENSER	17794	REF
1	1A15MP1	1121-0409 5120	TIP, DISPENSER, .023 ID, PINK	17794 0XUL4	5
2	1A15MP2	1121-0410 5121	TIP, DISPENSER, .020 ID, PURPLE	17794 0XUL4	5
3	1A15MP3	1121-0411 5122	TIP, DISPENSER, .016 ID, BLUE	17794 0XUL4	5
4	1A15MP4	1121-0412 5123	TIP, DISPENSER, .013 ID, ORANGE	17794 0XUL4	5
5	1A15MP5	1259-0091	ADAPTER, BARREL, 10CC	17794	1
6	1A15MP6	1325-0003-10	TUBING, PVC, CLEAR .125 ID, 36" LG.	17794	1
7	1A15MP7	1259-0087	DISCONNECT, QUICK CHANGE HOSE MT., MALE	17794	1
8	1A15MP8	1211-0036 5000-2	CLAMP, HOSE, REUSABLE	17794 90526	1

DWG NO.
B

REVISIONS				
LEVEL	AUTHORIZATION	DES. ENG. INITIAL	MFG. ENG. INITIAL	RELEASE APPROVAL INITIAL/DATE
A	EC 3759	C.CARDNO	M.PANT	03/04/94

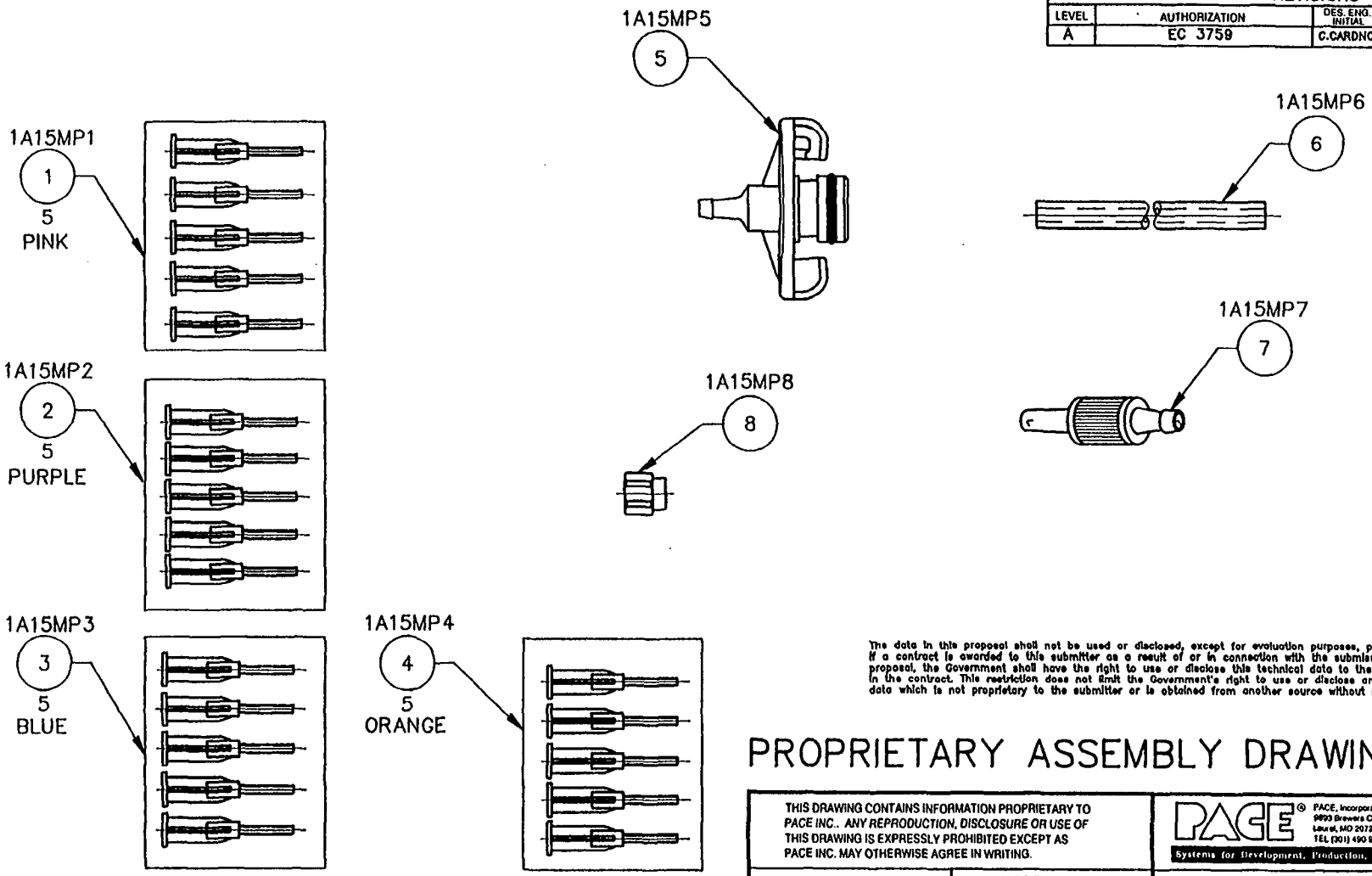

The data in this proposal shall not be used or disclosed, except for evaluation purposes, provided that if a contract is awarded to this submitter as a result of or in connection with the submission of this proposal, the Government shall have the right to use or disclose this technical data to the extent provided in the contract. This restriction does not limit the Government's right to use or disclose any technical data which is not proprietary to the submitter or is obtained from another source without restriction.

PROPRIETARY ASSEMBLY DRAWING

THIS DRAWING CONTAINS INFORMATION PROPRIETARY TO PACE INC.. ANY REPRODUCTION, DISCLOSURE OR USE OF THIS DRAWING IS EXPRESSLY PROHIBITED EXCEPT AS PACE INC. MAY OTHERWISE AGREE IN WRITING.

UNLESS OTHERWISE SPECIFIED DIMENSIONS ARE IN INCHES. DO NOT SCALE.

TOLERANCES		
2 PLACE	3 PLACE	ANGLES
± .01	± .005	± .5°

MATERIAL

FINISH

PACE®
PACE, Incorporated
9893 Brewers Court
Laurel, MD 20723, U.S.A.
TEL (301) 490 9860 FAX (301) 604-2180
Systems for Development, Production, and Repair of Electronic Assemblies

KIT
PASTE DISPENSER

F.S.C.M. NO.	DWG. NO.
17794	R6993-0152

REF. SCALE 1/1 | SK | SHEET 1 OF 1

1A15 6993-0152

CAD I INC. 301-565-3340 557825

PACE® INCORPORATED

PROPRIETARY PARTS LIST

The data in this proposal shall not be used or disclosed, except for evaluation purposes, provided that if a contract is awarded to this submitter as a result of or in connection with the submission of this proposal, the Government shall have the right to use or disclose this technical data to the extent provided in the contract. This restriction does not limit the Government's right to use or disclose any technical data which is not proprietary to the submitter or is obtained from another source without restriction.

DWG. NO: R6993-0166 REV: A EC NO: 3759 DATE: 3/4/94 APP:

AMENDED P/L FORMAT: 8/23/94

TITLE: KIT, HANDLE, POWER SOURCE

INDEX	REFERENCE NO.	PART NO.	DESCRIPTION	FSCM	QTY
REF	1MP1	6993-0166	KIT, HANDLE, POWER SOURCE	17794	REF
1	1MP1H1	1410-0093 GENERIC	NUT, THUMB, #6-32X3/8"DIA.	17794 ZZZ	2
2	1MP1H2	1405-0569 GENERIC	SCREW, HEX HD., #6-32X1/2"LG.	17794 ZZZ	2
3	1MP1MP1	2320-0004	HANDLE	17794	1

DWG NO.
B

REVISIONS				
LEVEL	AUTHORIZATION	DES. ENG. INITIAL	MFG. ENG. INITIAL	RELEASE APPROVAL INITIAL/DATE
A	EC 3759	C.CARDNO	M.PANT	03/04/94

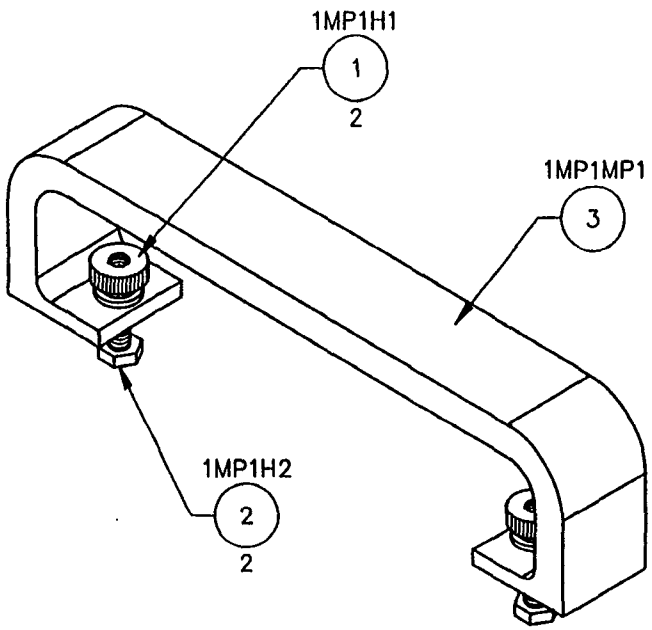

The data in this proposal shall not be used or disclosed, except for evaluation purposes, provided that if a contract is awarded to this submitter as a result of or in connection with the submission of this proposal, the Government shall have the right to use or disclose this technical data to the extent provided in the contract. This restriction does not limit the Government's right to use or disclose any technical data which is not proprietary to the submitter or is obtained from another source without restriction.

PROPRIETARY ASSEMBLY DRAWING

THIS DRAWING CONTAINS INFORMATION PROPRIETARY TO PACE INC.. ANY REPRODUCTION, DISCLOSURE OR USE OF THIS DRAWING IS EXPRESSLY PROHIBITED EXCEPT AS PACE INC. MAY OTHERWISE AGREE IN WRITING.

UNLESS OTHERWISE SPECIFIED DIMENSIONS ARE IN INCHES. DO NOT SCALE.

TOLERANCES		
2 PLACE	3 PLACE	ANGLES
± .01	± .005	± .5°

MATERIAL
—

FINISH
—

PACE®
PACE, Incorporated
9893 Brewers Court
Laurel, MD 20723, U.S.A.
TEL (301) 490-9860 FAX (301) 604-2180
Systems for Development, Production, and Repair of Electronic Assemblies

KIT,HANDLE
POWER SOURCE

F.S.C.M. NO.	DWG. NO.
17794	R6993-0166

REF. SCALE 1/1 | SK — | SHEET 1 OF 1

1MP1 6993-0166

CAD 1 INC. 301-565-3340 567825

PAGE® INCORPORATED

PROPRIETARY PARTS LIST

The data in this proposal shall not be used or disclosed, except for evaluation purposes, provided that if a contract is awarded to this submitter as a result of or in connection with the submission of this proposal, the Government shall have the right to use or disclose this technical data to the extent provided in the contract. This restriction does not limit the Government's right to use or disclose any technical data which is not proprietary to the submitter or is obtained from another source without restriction.

DWG. NO: R6019-0043 REV: A EC NO: 3759 DATE: 3/4/94 APP: JM

AMENDED P/L FORMAT: 8/23/94

TITLE: KIT, STAND, TIP & TOOL, SP

INDEX	REFERENCE NO.	PART NO.	DESCRIPTION	FSCM	QTY
REF	1MP2	6019-0043	KIT, STAND, TIP & TOOL, SP	17794	REF
1	1MP2H1	1410-0095	NUT, THUMB, #8-32, BLACK	17794	2
		GENERIC		ZZZ	
2	1MP2H2	1405-0648	SCREW, HEX HD., #8-32 X .50"LG	17794	2
		GENERIC		ZZZ	
3	1MP2MP1	4021-0008	SPONGE, STAND, TIP & TOOL	17794	1
4	1MP2MP2	1317-0031	PAD, 1" X .24" X .06"	17794	4
5	1MP2MP3	1257-0188	STAND, TIP&TOOL, SP	17794	1
6		5050-0357	INST.SHEET, TIP & TOOL	17794	1

DWG NO. B R6019-0043 | A

REVISIONS				
LEVEL	AUTHORIZATION	DES. ENG. INITIAL	MFG. ENG. INITIAL	RELEASE APPROVAL INITIAL/DATE
A	EC 3759	C.CARDNO	M.PANT	03/04/

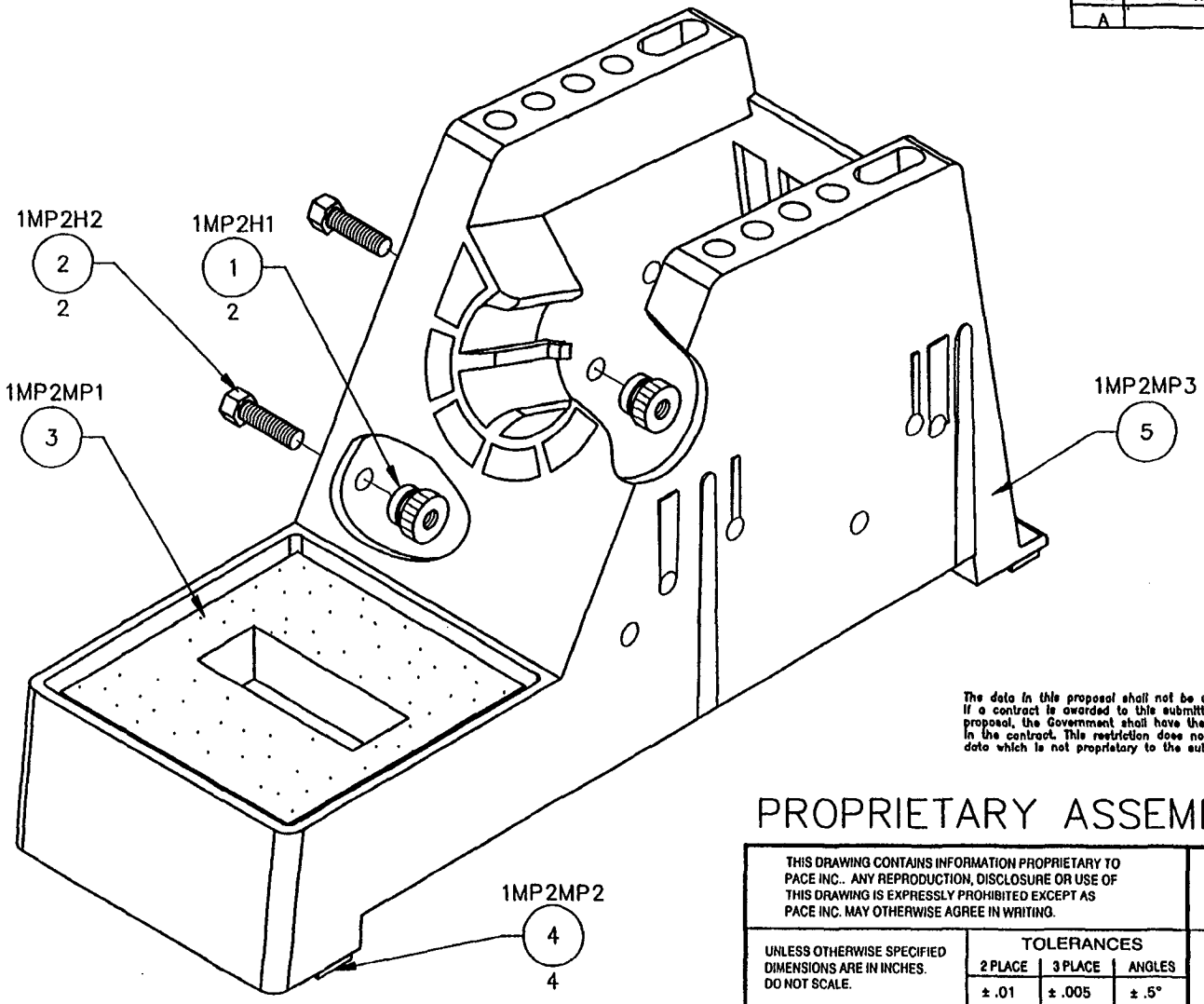

The data in this proposal shall not be used or disclosed, except for evaluation purposes, provided that if a contract is awarded to this submitter as a result of or in connection with the submission of this proposal, the Government shall have the right to use or disclose this technical data to the extent provided in the contract. This restriction does not limit the Government's right to use or disclose any technical data which is not proprietary to the submitter or is obtained from another source without restriction.

PROPRIETARY ASSEMBLY DRAWING

THIS DRAWING CONTAINS INFORMATION PROPRIETARY TO PACE INC.. ANY REPRODUCTION, DISCLOSURE OR USE OF THIS DRAWING IS EXPRESSLY PROHIBITED EXCEPT AS PACE INC. MAY OTHERWISE AGREE IN WRITING.

PACE®
PACE, Incorporated
8693 Brewers Court
Laurel, MD 20723, U.S.A.
TEL (301) 490 9860 FAX (301) 604-2160
Systems for Development, Production, and Repair of Electronic Assemblies

UNLESS OTHERWISE SPECIFIED DIMENSIONS ARE IN INCHES. DO NOT SCALE.

TOLERANCES		
2 PLACE	3 PLACE	ANGLES
± .01	± .005	± .5°

MATERIAL

FINISH

KIT, STAND
TIP & TOOL,SP

F.S.C.M. NO.	DWG. NO.
17794	R6019-0043

REF. SCALE 1/1 | SK | SHEET 1 OF 1

CAD 1 INC. 301-585-3340 567825

1MP2 6019-0043

PACE® INCORPORATED

PROPRIETARY PARTS LIST

The data in this proposal shall not be used or disclosed, except for evaluation purposes, provided that if a contract is awarded to this submitter as a result of or in connection with the submission of this proposal, the Government shall have the right to use or disclose this technical data to the extent provided in the contract. This restriction does not limit the Government's right to use or disclose any technical data which is not proprietary to the submitter or is obtained from another source without restriction.

DWG. NO: R6019-0044 REV: A EC NO: 3759 DATE: 3/4/94 APP:

AMENDED P/L FORMAT: 8/23/94

TITLE: KIT, STAND, TIP & TOOL, SX

INDEX	REFERENCE NO.	PART NO.	DESCRIPTION	FSCM	QTY
REF	1MP3	6019-0044	KIT, STAND, TIP & TOOL, SX	17794	REF
1	1MP3H1	1410-0095	NUT, THUMB, #8-32, BLACK	17794	2
		GENERIC		ZZZ	
2	1MP3H2	1405-0648	SCREW, HEX HD., #8-32 X .50"LG	17794	2
		GENERIC		ZZZ	
3	1MP3MP1	4021-0008	SPONGE, STAND, TIP & TOOL	17794	1
4	1MP3MP2	1317-0031	PAD, 1" X .24" X .06"	17794	4
5	1MP3MP3	1257-0189	STAND, TIP&TOOL, SX	17794	1
6		5050-0357	INST.SHEET, TIP & TOOL	17794	1

DWG NO. BR6019-0044 | A

REVISIONS				
LEVEL	AUTHORIZATION	DES. ENG. INITIAL	MFG. ENG. INITIAL	RELEASE APPROVAL INITIAL/DATE
A	EC 3759	C.CARDNO	M.PANT	03/04/

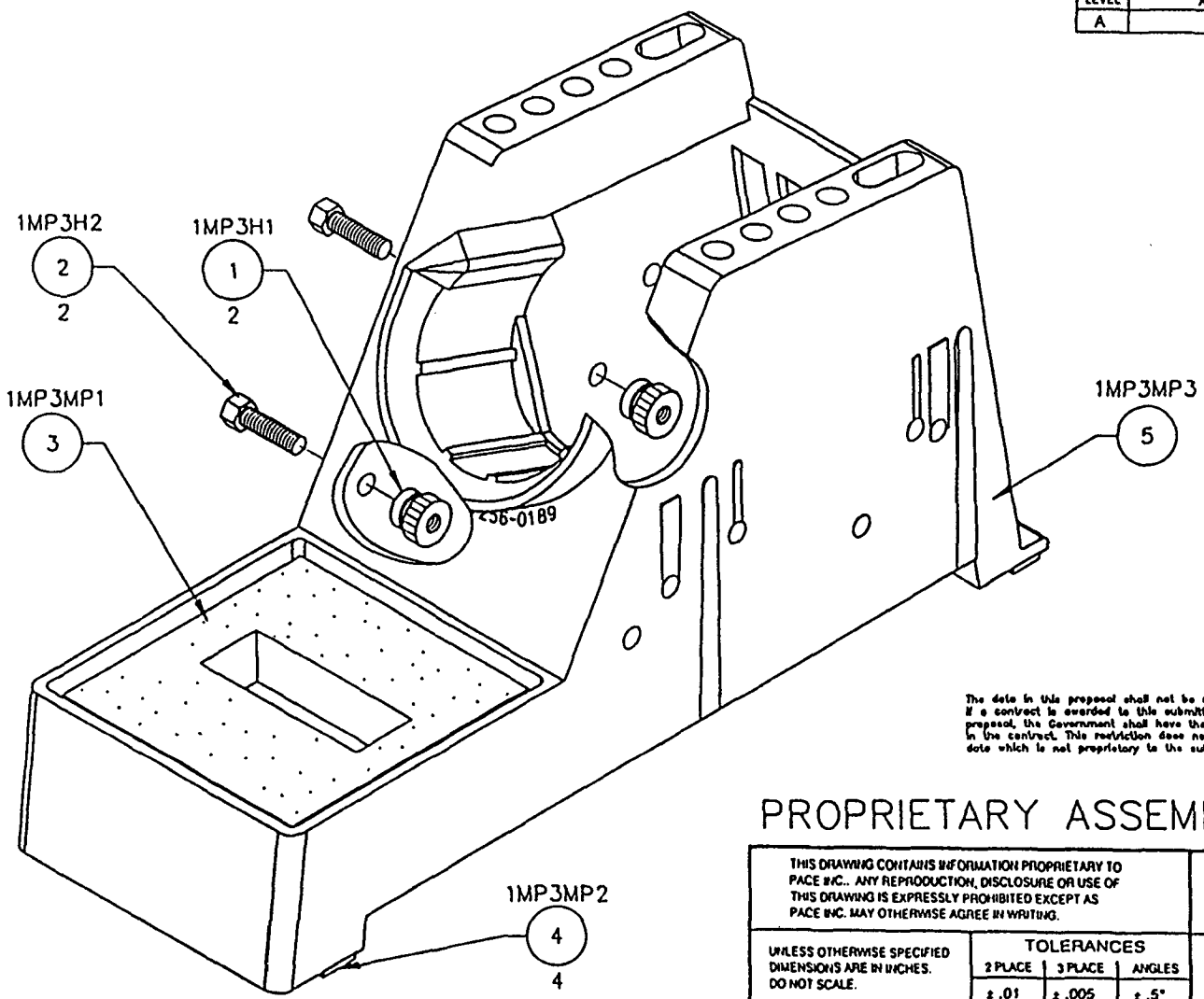

The data in this proposal shall not be used or disclosed, except for evaluation purposes, provided that if a contract is awarded to this submitter as a result of or in connection with the submission of this proposal, the Government shall have the right to use or disclose this technical data to the extent provided in the contract. This restriction does not limit the Government's right to use or disclose any technical data which is not proprietary to the submitter or is obtained from another source without restriction.

PROPRIETARY ASSEMBLY DRAWING

THIS DRAWING CONTAINS INFORMATION PROPRIETARY TO PACE INC.. ANY REPRODUCTION, DISCLOSURE OR USE OF THIS DRAWING IS EXPRESSLY PROHIBITED EXCEPT AS PACE INC. MAY OTHERWISE AGREE IN WRITING.

UNLESS OTHERWISE SPECIFIED DIMENSIONS ARE IN INCHES. DO NOT SCALE.

TOLERANCES		
2 PLACE	3 PLACE	ANGLES
± .01	± .005	± .5°

MATERIAL

FINISH

PACE
PACE, Incorporated
9800 Brewers Court
Laurel, MD 20723, U.S.A.
TEL (301) 490 9000 FAX (301) 604 2100
Systems for Development, Production, and Repair of Electronic Assemblies

KIT, STAND
TIP & TOOL,SX

F.S.C.M. NO.	DWG. NO.
17794	R6019-0044

REF. SCALE 1/1 | SK | SHEET 1 OF 1

1MP3 6019-0044

CAD 1 INC. 301-595-3240 587625

PACE® INCORPORATED

PROPRIETARY PARTS LIST

The data in this proposal shall not be used or disclosed, except for evaluation purposes, provided that if a contract is awarded to this submitter as a result of or in connection with the submission of this proposal, the Government shall have the right to use or disclose this technical data to the extent provided in the contract. This restriction does not limit the Government's right to use or disclose any technical data which is not proprietary to the submitter or is obtained from another source without restriction.

DWG. NO: R6019-0046 REV: A EC NO: 4083 DATE: 08/11/95 APP:

TITLE: KIT, STAND, TIP & TOOL, TT

INDEX	REFERENCE NO.	PART NO.	DESCRIPTION	FSCM	QTY
REF	1MP4	6019-0046	KIT, STAND, TIP & TOOL, TT	17794	REF
1	1MP4H1	1410-0095	NUT, THUMB, #8-32, BLACK	17794	2
		GENERIC		ZZZ	
2	1MP4H2	1405-0648	SCREW, HEX HD., #8-32 X .50"LG	17794	2
		GENERIC		ZZZ	
3	1MP4H3	1405-0582	SCREW, THD. FORM, PAN HD., #6-32 X .38" LG.	17794	2
		GENERIC		ZZZ	
4	1MP4MP1	4021-0008	SPONGE, STAND, TIP & TOOL	17794	1
5	1MP4MP2	1317-0031	PAD, 1" X .24" X .06"	17794	4
6	1MP4MP3	1257-0191	STAND, TIP&TOOL, TT	17794	1
7	1MP4MP4	1257-0192	BRACKET, SUPPORT, THERMOTWEEZ	17794	1
8	IMP4MP5	1335-0165	COVER, TIP&TOOL STAND	17794	1
9		5050-0357	INST.SHEET, TIP & TOOL	17794	1

DWG NO. B R6019-0046 | A

REVISIONS				
LEVEL	AUTHORIZATION	DES. ENG. INITIAL	MFG. ENG. INITIAL	RELEASE APPROVAL INITIAL/DATE
A	EC 4083	C.CARONO	M.PANT	

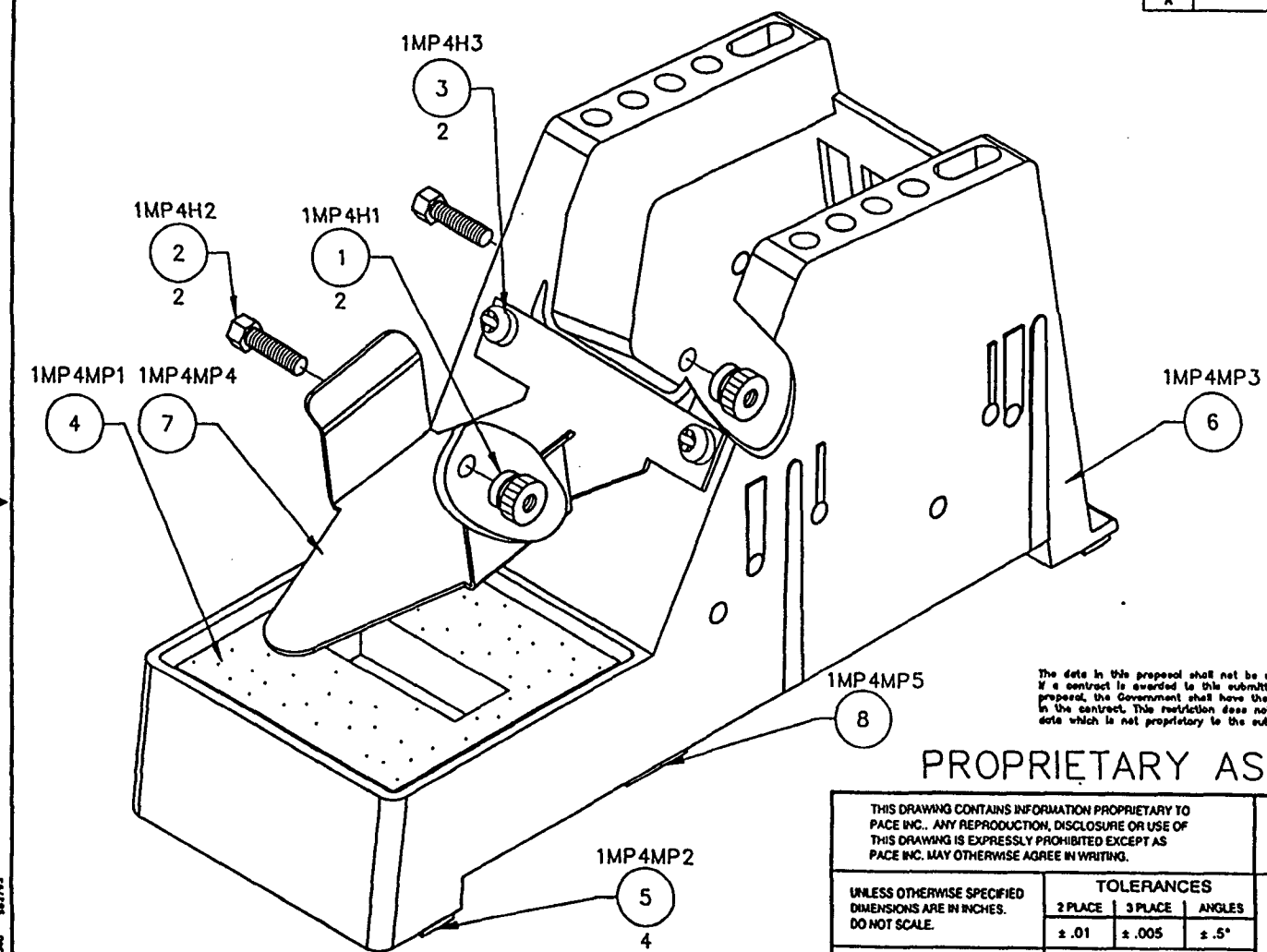

The data in this proposal shall not be used or disclosed, except for evaluation purposes, provided that if a contract is awarded to this submitter as a result of or in connection with the submission of this proposal, the Government shall have the right to use or disclose this technical data to the extent provided in the contract. This restriction does not limit the Government's right to use or disclose any technical data which is not proprietary to the submitter or is obtained from another source without restriction.

PROPRIETARY ASSEMBLY DRAWING

THIS DRAWING CONTAINS INFORMATION PROPRIETARY TO PACE INC.. ANY REPRODUCTION, DISCLOSURE OR USE OF THIS DRAWING IS EXPRESSLY PROHIBITED EXCEPT AS PACE INC. MAY OTHERWISE AGREE IN WRITING.

PACE®
PACE, Incorporated
8883 Brewers Court
Laurel, MD 20723, U.S.A.
TEL (301) 490 8660 FAX (301) 604-2100
Systems for Development, Production, and Repair of Electronic Assemblies

UNLESS OTHERWISE SPECIFIED DIMENSIONS ARE IN INCHES. DO NOT SCALE.

TOLERANCES		
2 PLACE	3 PLACE	ANGLES
± .01	± .005	± .5°

MATERIAL

FINISH

KIT, STAND
TIP & TOOL, TT

F.S.C.M. NO.	DWG. NO.
17794	R6019-0046

REF. SCALE 1/1 | SK | SHEET 1 OF 1

CAD 1 INC. 301-596-3340 583793

PACE® INCORPORATED

PROPRIETARY PARTS LIST

The data in this proposal shall not be used or disclosed, except for evaluation purposes, provided that if a contract is awarded to this submitter as a result of or in connection with the submission of this proposal, the Government shall have the right to use or disclose this technical data to the extent provided in the contract. This restriction does not limit the Government's right to use or disclose any technical data which is not proprietary to the submitter or is obtained from another source without restriction.

DWG. NO: R6019-0038 REV: A EC NO: 3759 DATE: 3/4/94 APP: m

AMENDED P/L FORMAT: 8/23/94

TITLE: CUBBY, PASTE DISPENSER

INDEX	REFERENCE NO.	PART NO.	DESCRIPTION	FSCM	QTY
REF	1MP5	6019-0038	CUBBY, PASTE DISPENSER	17794	REF
1A	1MP5H1	1405-0398-02 GENERIC	SCREW,PAN HD.#6-32X5/16 W/INT.TOOTH LWASHER	17794 ZZZ	1
1B	1MP5H2	1405-0398-02 GENERIC	SCREW,PAN HD.#6-32X5/16 W/INT.TOOTH LWASHER	17794 ZZZ	1
2A	1MP5H3	1410-0088 GENERIC	NUT, HEX, #6-32, SMALL PATTERN	17794 ZZZ	1
2B	1MP5H4	1410-0088 GENERIC	NUT,HEX, #6-32, SMALL PATTERN	17794 ZZZ	1
3	1MP5MP1	1257-0173	BASE, STAND	17794	1
4	1MP5MP2	1257-0126	STAND	17794	1
5	1MP5MP3	1251-0076 2140	BUSHING, SNAP, .75"ID,1.0"OD,BLACK	17794 28520	1
6		5050-0314	INST. SHEET, CUBBY, PASTE DISPINSER	17794	1

DWG NO. B R6019-0038 | A

REVISIONS				
LEVEL	AUTHORIZATION	DES. ENG. INITIAL	MFG. ENG. INITIAL	RELEASE APPROVAL INITIAL/DATE
A	EC 3759	C.CARDNO	M.PANT	03/04/

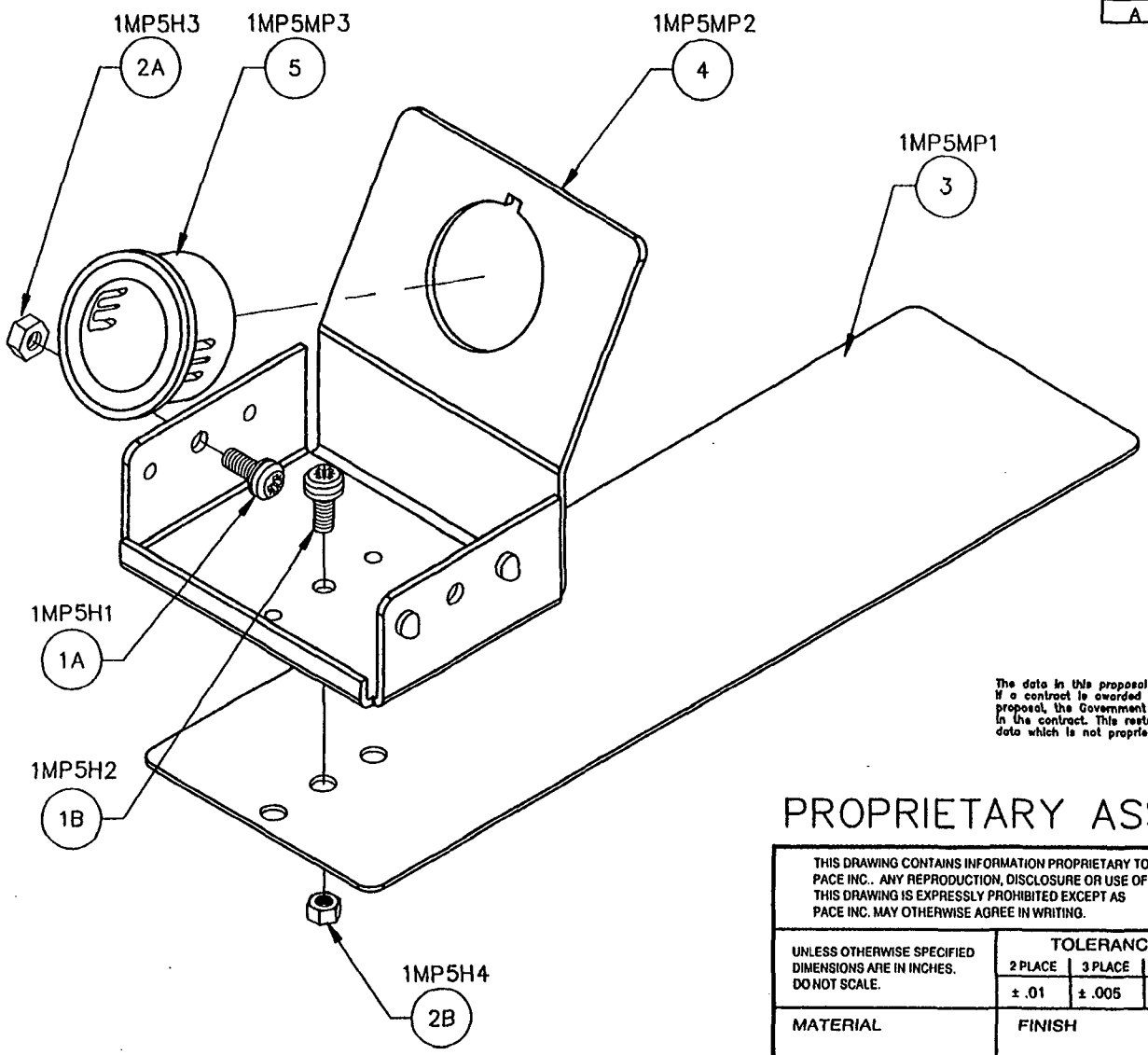

The data in this proposal shall not be used or disclosed, except for evaluation purposes, provided that if a contract is awarded to this submitter as a result of or in connection with the submission of this proposal, the Government shall have the right to use or disclose this technical data to the extent provided in the contract. This restriction does not limit the Government's right to use or disclose any technical data which is not proprietary to the submitter or is obtained from another source without restriction.

PROPRIETARY ASSEMBLY DRAWING

THIS DRAWING CONTAINS INFORMATION PROPRIETARY TO PACE INC.. ANY REPRODUCTION, DISCLOSURE OR USE OF THIS DRAWING IS EXPRESSLY PROHIBITED EXCEPT AS PACE INC. MAY OTHERWISE AGREE IN WRITING.

PACE® PACE, Incorporated
9893 Brewers Court
Laurel, MD 20723, U.S.A.
TEL (301) 490-9860 FAX (301) 604-2180
Systems for Development, Production, and Repair of Electronic Assemblies

UNLESS OTHERWISE SPECIFIED DIMENSIONS ARE IN INCHES. DO NOT SCALE.

TOLERANCES		
2 PLACE	3 PLACE	ANGLES
± .01	± .005	± .5°

MATERIAL

FINISH

CUBBY
PASTE DISPENSER

F.S.C.M. NO.	DWG. NO.
17794	R6019-0038

REF. SCALE 1/1 | SK | SHEET 1 OF 1

1MP5 6019-0038

CAD 1 INC. 301-545-3340 567825

PAGE® INCORPORATED

PROPRIETARY PARTS LIST

The data in this proposal shall not be used or disclosed, except for evaluation purposes, provided that if a contract is awarded to this submitter as a result of or in connection with the submission of this proposal, the Government shall have the right to use or disclose this technical data to the extent provided in the contract. This restriction does not limit the Government's right to use or disclose any technical data which is not proprietary to the submitter or is obtained from another source without restriction.

DWG. NO: R6019-0022 REV: A EC NO: 3759 DATE: 3/4/94 APP:

AMENDED P/L FORMAT: 8/23/94

TITLE: CUBBY, SMR

INDEX	REFERENCE NO.	PART NO.	DESCRIPTION	FSCM	QTY
REF	1MP6	6019-0022	CUBBY, SMR	17794	REF
1	1MP6H1	1405-0027 GENERIC	SCREW, BNDR HD., #6-32 X .25"LG	17794 ZZZ	2
2	1MP6H2	1410-0088 GENERIC	NUT, HEX, #6-32, SMALL PATTERN	17794 ZZZ	2
3	1MP6MP1	1257-0140	STAND, CUBBY	17794	1

DWG NO.
B

REVISIONS				
LEVEL	AUTHORIZATION	DES. ENG. INITIAL	MFG. ENG. INITIAL	RELEASE APPROVAL INITIAL/DATE
A	EC 3759	C. CARDNO	M. PANT	3/4/94

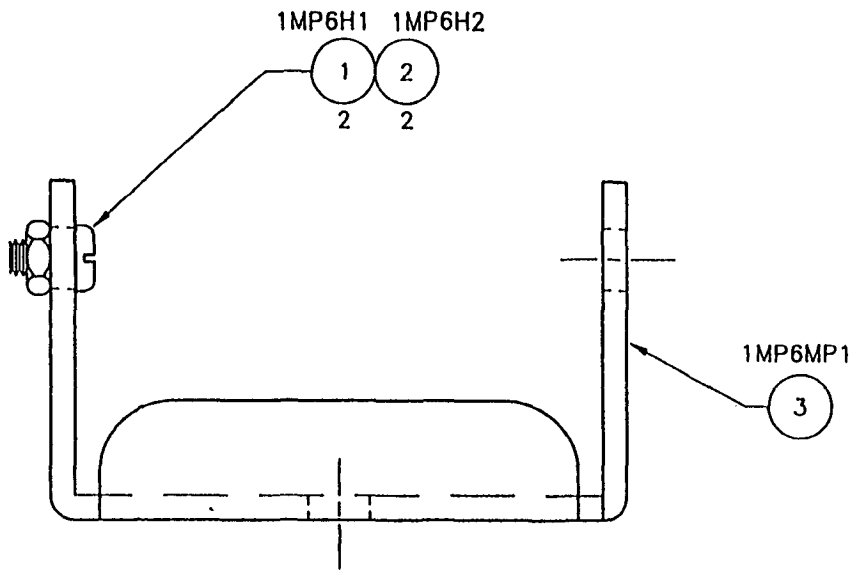

The data in this proposal shall not be used or disclosed, except for evaluation purposes, provided that if a contract is awarded to this submitter as a result of or in connection with the submission of this proposal, the Government shall have the right to use or disclose this technical data to the extent provided in the contract. This restriction does not limit the Government's right to use or disclose any technical data which is not proprietary to the submitter or is obtained from another source without restriction.

PROPRIETARY ASSEMBLY DRAWING

THIS DRAWING CONTAINS INFORMATION PROPRIETARY TO PACE INC.. ANY REPRODUCTION, DISCLOSURE OR USE OF THIS DRAWING IS EXPRESSLY PROHIBITED EXCEPT AS PACE INC. MAY OTHERWISE AGREE IN WRITING.

PACE®
PACE, Incorporated
9863 Brewers Court
Laurel, MD 20723, U.S.A.
TEL (301) 490 9860 FAX (301) 604-2160
Systems for Development, Production, and Repair of Electronic Assemblies

UNLESS OTHERWISE SPECIFIED DIMENSIONS ARE IN INCHES. DO NOT SCALE.

TOLERANCES		
2 PLACE	3 PLACE	ANGLES
± .01	± .005	± .5°

MATERIAL
–

FINISH
NONE

CUBBY, SMR

F.S.C.M. NO.	DWG. NO.
17794	R6019–0022

REF. SCALE 2/1 | SK – | SHEET 1 OF 1

1HP6 6019-0022

CAD 1 INC. 301-565-3340 567825

PAGE® INCORPORATED

PROPRIETARY PARTS LIST

The data in this proposal shall not be used or disclosed, except for evaluation purposes, provided that if a contract is awarded to this submitter as a result of or in connection with the submission of this proposal, the Government shall have the right to use or disclose this technical data to the extent provided in the contract. This restriction does not limit the Government's right to use or disclose any technical data which is not proprietary to the submitter or is obtained from another source without restriction.

DWG. NO: R1257-0186-P1 REV: A EC NO: 3759 DATE: 3/4/94 APP:

AMENDED P/L FORMAT: 8/23/94

TITLE: STAND, CHART HOLDER W/MTG.HARDWARE

INDEX	REFERENCE NO.	PART NO.	DESCRIPTION	FSCM	QTY
REF	1MP7	1257-0186-P1	STAND, CHART HOLDER W/MTG.HARDWARE	17794	REF
1	1MP7H1	1405-0398-02 GENERIC	SCREW,PAN HD.,#6-32X.31"LG.W/LOCKWASHER	17794 ZZZ	2
2	1MP7H2	1410-0088 GENERIC	NUT, HEX #6-32, SMALL PATTERN	17794 ZZZ	2
3	1MP7MP1	1257-0186	STAND, CHART HOLDER	17794	1
4		5050-0345	INST. SHEET, CHART HOLDER	17794	1

DWG NO. B R1257-0186-P1 | A

REVISIONS				
LEVEL	AUTHORIZATION	DES. ENG. INITIAL	MFG. ENG. INITIAL	RELEASE APPROVAL INITIAL/DATE
A	EC 3759	C.CARDNO	M.PANT	3/4/9

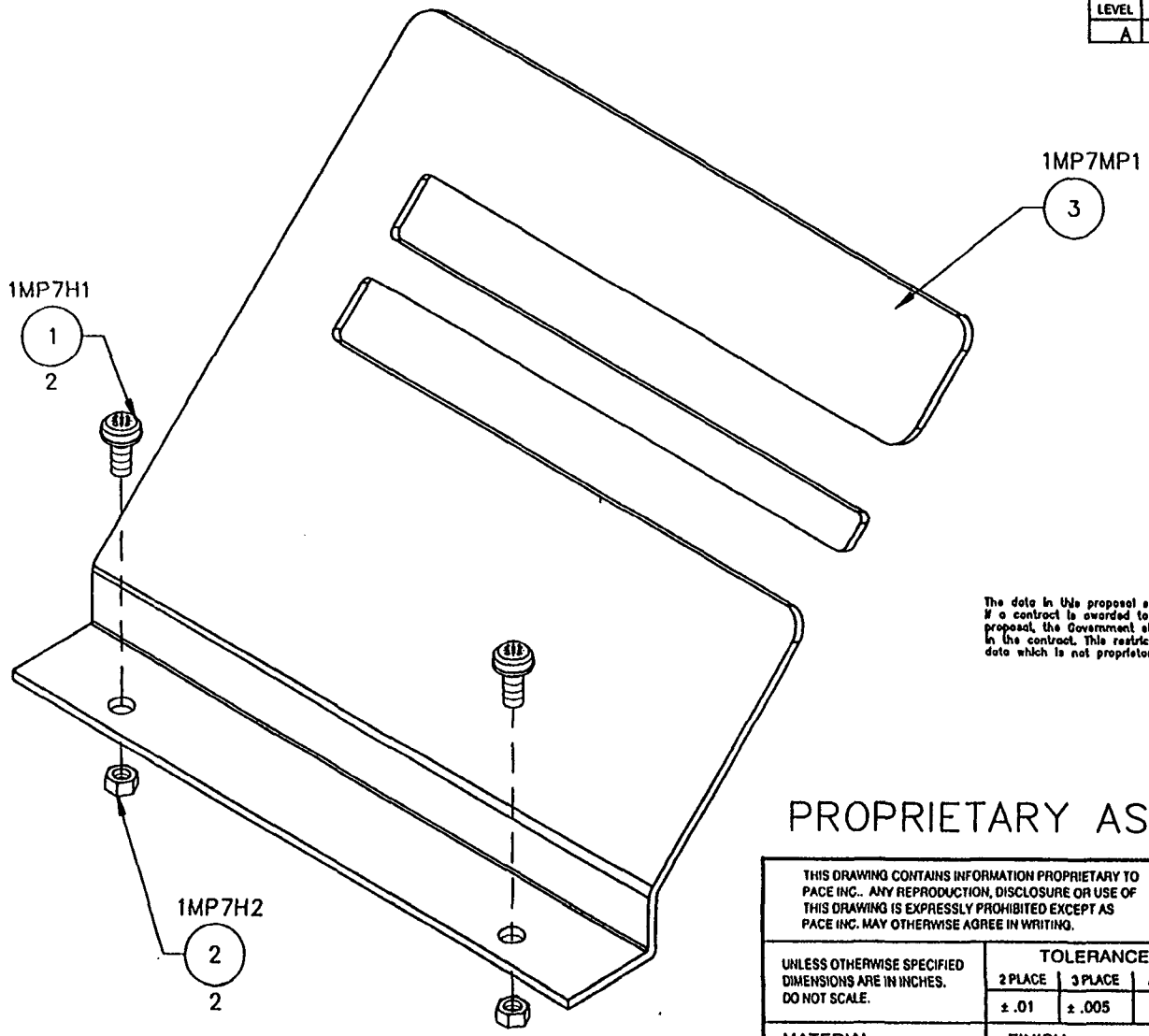

The data in this proposal shall not be used or disclosed, except for evaluation purposes, provided that if a contract is awarded to this submitter as a result of or in connection with the submission of this proposal, the Government shall have the right to use or disclose this technical data to the extent provided in the contract. This restriction does not limit the Government's right to use or disclose any technical data which is not proprietary to the submitter or is obtained from another source without restriction.

PROPRIETARY ASSEMBLY DRAWING

THIS DRAWING CONTAINS INFORMATION PROPRIETARY TO PACE INC.. ANY REPRODUCTION, DISCLOSURE OR USE OF THIS DRAWING IS EXPRESSLY PROHIBITED EXCEPT AS PACE INC. MAY OTHERWISE AGREE IN WRITING.

UNLESS OTHERWISE SPECIFIED DIMENSIONS ARE IN INCHES. DO NOT SCALE.

TOLERANCES		
2 PLACE	3 PLACE	ANGLES
± .01	± .005	± .5°

MATERIAL

FINISH

PACE® PACE, Incorporated
9863 Brewers Court
Laurel, MD 20723, U.S.A.
TEL (301) 490-9860 FAX (301) 604-2180
Systems for Development, Production, and Repair of Electronic Assemblies

STAND, CHART HOLDER W/MTG. HARDWARE

F.S.C.M. NO.	DWG. NO.
17794	R1257-0186-P1

REF. SCALE 1/1 | SK | SHEET 1 OF 1

CAD 1 INC. 301-565-3340 567825

1MP7 1257-0186-P1

PACE® INCORPORATED

PROPRIETARY PARTS LIST

The data in this proposal shall not be used or disclosed, except for evaluation purposes, provided that if a contract is awarded to this submitter as a result of or in connection with the submission of this proposal, the Government shall have the right to use or disclose this technical data to the extent provided in the contract. This restriction does not limit the Government's right to use or disclose any technical data which is not proprietary to the submitter or is obtained from another source without restriction.

DWG. NO: R6019-0023 REV: A EC NO: 3759 DATE: 3/4/94 APP: nl

AMENDED P/L FORMAT: 8/23/94

TITLE: REDI-RAK, HANDPIECE

INDEX	REFERENCE NO.	PART NO.	DESCRIPTION	FSCM	QTY
REF	1MP8	6019-0023	REDI-RAK, HANDPIECE	17794	REF
1	1MP8H1	1405-0031 GENERIC	SCREW, BNDR.HD.,#6-32X1/2"LG.	17794 ZZZ	2
2	1MP8H2	1410-0088 GENERIC	NUT, HEX #6-32,SMALL PATTERN	17794 ZZZ	2
3	1MP8H3	1415-0059 GENERIC	WASHER, SPLITLOCK, #6	17794 ZZZ	2
4	1MP8MP1	1257-0150	TOOL HOLDER	17794	1

DWG NO.
B

REVISIONS				
LEVEL	AUTHORIZATION	DES. ENG. INITIAL	MFG. ENG. INITIAL	RELEASE APPROVAL INITIAL/DATE
A	EC 3759	C. CARDNO	M. PANT	3/4/94

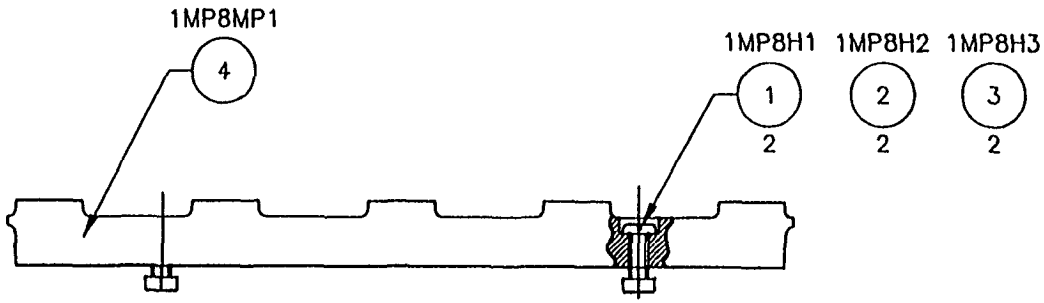

The data in this proposal shall not be used or disclosed, except for evaluation purposes, provided that if a contract is awarded to this submitter as a result of or in connection with the submission of this proposal, the Government shall have the right to use or disclose this technical data to the extent provided in the contract. This restriction does not limit the Government's right to use or disclose any technical data which is not proprietary to the submitter or is obtained from another source without restriction.

PROPRIETARY ASSEMBLY DRAWING

THIS DRAWING CONTAINS INFORMATION PROPRIETARY TO PACE INC.. ANY REPRODUCTION, DISCLOSURE OR USE OF THIS DRAWING IS EXPRESSLY PROHIBITED EXCEPT AS PACE INC. MAY OTHERWISE AGREE IN WRITING.

PACE®
PACE, Incorporated
8883 Brewers Court
Laurel, MD 20723, U.S.A.
TEL (301) 490-9660 FAX (301) 604-2160
Systems for Development, Production, and Repair of Electronic Assemblies

UNLESS OTHERWISE SPECIFIED
DIMENSIONS ARE IN INCHES.
DO NOT SCALE.

TOLERANCES		
2 PLACE	3 PLACE	ANGLES
± .01	± .005	± .5°

MATERIAL
—

FINISH
NONE

REDI–RAK, HANDPIECE

F.S.C.M. NO. 17794

DWG. NO. R6019–0023

REF. SCALE 1/1 SK – SHEET 1 OF 1

1MP8 6019-0023

CAD 1 INC. 301-585-3340 567825

PAGE® INCORPORATED

PROPRIETARY PARTS LIST

The data in this proposal shall not be used or disclosed, except for evaluation purposes, provided that if a contract is awarded to this submitter as a result of or in connection with the submission of this proposal, the Government shall have the right to use or disclose this technical data to the extent provided in the contract. This restriction does not limit the Government's right to use or disclose any technical data which is not proprietary to the submitter or is obtained from another source without restriction.

DWG. NO: R6021-0007 REV: A EC NO: 3759 DATE: 3/4/94 APP: ml

AMENDED P/L FORMAT: 8/23/94

TITLE: REDI-RAK, TIP

INDEX	REFERENCE NO.	PART NO.	DESCRIPTION	FSCM	QTY
REF	1MP9	6021-0007	REDI-RAK, TIP	17794	REF
1	1MP9H1	1405-0030 GENERIC	SCREW, BINDER HD., #6-32X7/16"LG.	17794 ZZZ	2
2	1MP9H2	1410-0088 GENERIC	NUT, HEX, #6-32, SMALL PATTERN	17794 ZZZ	2
3	1MP9MP1	1321-0236	STAND, REDI-RAK	17794	1
4		5050-0315	INST. SHEET, REDI-RAK	17794	1

DWG NO. B R6021-0007 | A

REVISIONS				
LEVEL	AUTHORIZATION	DES. ENG. INITIAL	MFG. ENG. INITIAL	RELEASE APPROVAL INITIAL/DATE
A	EC 3759	C.CARDNO	M.PANT	3/4/9

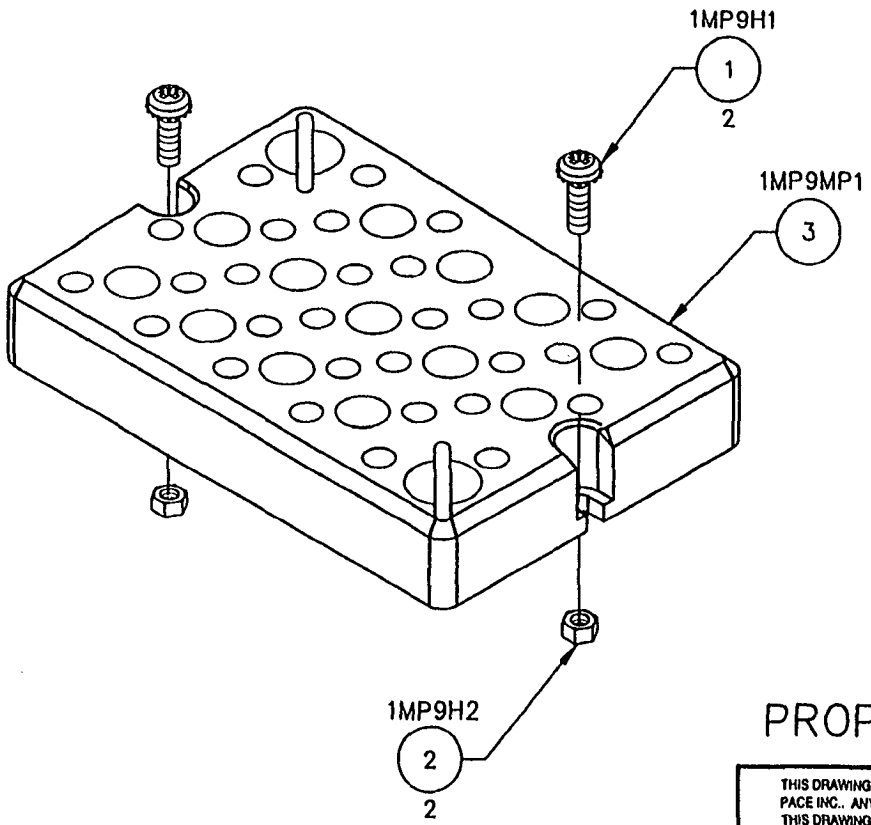

The data in this proposal shall not be used or disclosed, except for evaluation purposes, provided that if a contract is awarded to this submitter as a result of or in connection with the submission of this proposal, the Government shall have the right to use or disclose this technical data to the extent provided in the contract. This restriction does not limit the Government's right to use or disclose any technical data which is not proprietary to the submitter or is obtained from another source without restriction.

PROPRIETARY ASSEMBLY DRAWING

THIS DRAWING CONTAINS INFORMATION PROPRIETARY TO PACE INC.. ANY REPRODUCTION, DISCLOSURE OR USE OF THIS DRAWING IS EXPRESSLY PROHIBITED EXCEPT AS PACE INC. MAY OTHERWISE AGREE IN WRITING.

PACE, Incorporated
9803 Brewers Court
Laurel, MD 20723, U.S.A.
TEL (301) 490 8660 FAX (301) 604-2160
Systems for Development, Production, and Repair of Electronic Assemblies

UNLESS OTHERWISE SPECIFIED DIMENSIONS ARE IN INCHES. DO NOT SCALE.

TOLERANCES		
2 PLACE	3 PLACE	ANGLES
± .01	± .005	± .5°

MATERIAL

FINISH

REDI–RAK,TIP

F.S.C.M. NO.	DWG. NO.
17794	R6021–0007

REF. SCALE 1/1 | SK | SHEET 1 OF 1

1HP9 6021-0007

CAD 1 INC. 301-585-3340 567825

PACE® INCORPORATED

PROPRIETARY PARTS LIST

The data in this proposal shall not be used or disclosed, except for evaluation purposes, provided that if a contract is awarded to this submitter as a result of or in connection with the submission of this proposal, the Government shall have the right to use or disclose this technical data to the extent provided in the contract. This restriction does not limit the Government's right to use or disclose any technical data which is not proprietary to the submitter or is obtained from another source without restriction.

DWG. NO: R1332-0094 REV: A EC NO: 3759 DATE: 3/4/94 APP:

AMENDED P/L FORMAT: 8/23/94

TITLE: POWER CORD, DETACHABLE, DOMESTIC

INDEX	REFERENCE NO.	PART NO.	DESCRIPTION	FSCM	QTY
REF	1W1	1332-0094 17251	POWER CORD, DETACHABLE, DOMESTIC	17794 1BU49	REF

DWG NO. A R 1332-0094 A

REVISIONS				
LEVEL	AUTHORIZATION	DES. ENG. INITIAL	MFG. ENG. INITIAL	RELEASE APPROVAL INITIAL/DATE
A	EC 3759	C.CARDNO	M.PANT	3/4/93

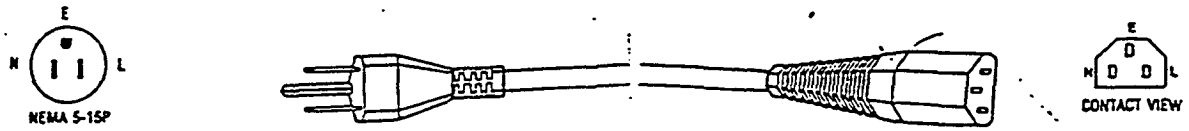

CONDUCTOR: 18awg (41 X 34)
CORDAGE TYPE: SVT
COLOR CODE: CEE
JACKET: Black or Grey, PVC
CONNECTOR: Molded PVC grounding connector
PLUG: Molded PVC grounding plug, NEMA 5–15P
CURRENT RATING: 6 amps
VOLTAGE: 125V
OVERALL LENGTH OF CORD SET: 8 feet APPROX.
APPROVAL MARKS: Parts or package must be marked for traceability to UL listing and approval by CSA (Canada)
NOTE: CORD SET TO BE HANKED WITH A 7.0" TO 8.0" LENGTH LOOP AND BOTH ENDS FREE.

SUGGESTED SOURCE:

BELDEN, WIRE AND CABLE
P.O. BOX 1980
RICHMOND, IN 47375
TEL.: (317)983–5200
PART NO.: 17251
(N.S.N. 6150–01–254–2625; 6150–01–084–6385)

The data in this proposal shall not be used or disclosed, except for evaluation purposes, provided that if a contract is awarded to this submitter as a result of or in connection with the submission of this proposal, the Government shall have the right to use or disclose this technical data to the extent provided in the contract. This restriction does not limit the Government's right to use or disclose any technical data which is not proprietary to the submitter or is obtained from another source without restriction.

SPECIFICATION CONTROL DRAWING

THIS DRAWING CONTAINS INFORMATION PROPRIETARY TO PACE INC.. ANY REPRODUCTION, DISCLOSURE OR USE OF THIS DRAWING IS EXPRESSLY PROHIBITED EXCEPT AS PACE INC. MAY OTHERWISE AGREE IN WRITING.

PACE®
PACE, Incorporated
9803 Brewers Court
Laurel, MD 20723, U.S.A.
TEL (301) 490-9660 FAX (301) 604-2160
Systems for Development, Production, and Repair of Electronic Assemblies

UNLESS OTHERWISE SPECIFIED DIMENSIONS ARE IN INCHES. DO NOT SCALE.

TOLERANCES		
2 PLACE	3 PLACE	ANGLES
± .01	± .005	± .5°

MATERIAL —

FINISH —

CORD
POWER SUPPLY

F.S.C.M. NO.	DWG. NO.
17794	R1332–0094

REF. SCALE | SK — | SHEET 1 OF 1

CAD 1 INC. 301-565-3340 567825

1W1 1332-0094

PACE® INCORPORATED

PROPRIETARY PARTS LIST

The data in this proposal shall not be used or disclosed, except for evaluation purposes, provided that if a contract is awarded to this submitter as a result of or in connection with the submission of this proposal, the Government shall have the right to use or disclose this technical data to the extent provided in the contract. This restriction does not limit the Government's right to use or disclose any technical data which is not proprietary to the submitter or is obtained from another source without restriction.

DWG. NO: R7000-0023 REV: A EC NO: 3759 DATE: 3/4/94 APP:

AMENDED P/L FORMAT: 8/23/94

TITLE: UNIVERSAL POWER CORD, HANDPIECE

INDEX	REFERENCE NO.	PART NO.	DESCRIPTION	FSCM	QTY
REF	1W2	7000-0023	UNIVERSAL POWER CORD, HANDPIECE	17794	REF

DWG NO. BR7000-0023 | A

REVISIONS				
LEVEL	AUTHORIZATION	DES. ENG. INITIAL	MFG. ENG. INITIAL	RELEASE APPROVAL INITIAL/DATE
A	EC 3759	C. CARDNO	M. PANT	3/4/94

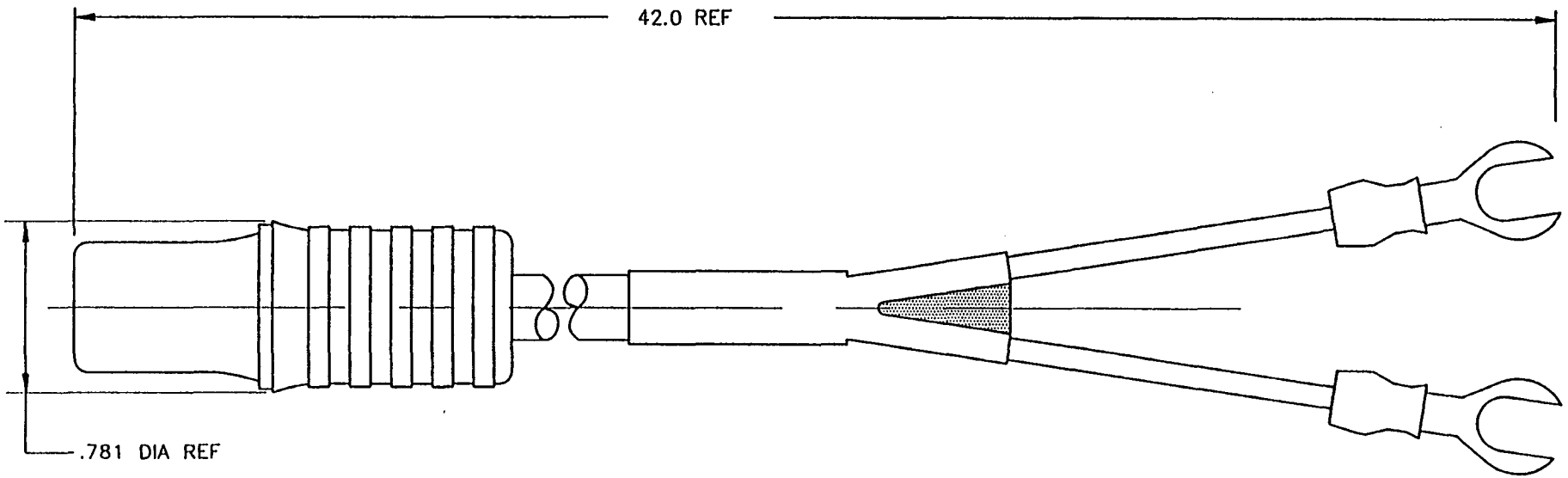

The data in this proposal shall not be used or disclosed, except for evaluation purposes, provided that if a contract is awarded to this submitter as a result of or in connection with the submission of this proposal, the Government shall have the right to use or disclose this technical data to the extent provided in the contract. This restriction does not limit the Government's right to use or disclose any technical data which is not proprietary to the submitter or is obtained from another source without restriction.

PROPRIETARY SOURCE CONTROL DRAWING

THIS DRAWING CONTAINS INFORMATION PROPRIETARY TO PACE INC.. ANY REPRODUCTION, DISCLOSURE OR USE OF THIS DRAWING IS EXPRESSLY PROHIBITED EXCEPT AS PACE INC. MAY OTHERWISE AGREE IN WRITING.

PACE, Incorporated
9893 Brewers Court
Laurel, MD 20723, U.S.A.
TEL (301) 490 9660 FAX (301) 604-2160
Systems for Development, Production, and Repair of Electronic Assemblies

UNLESS OTHERWISE SPECIFIED DIMENSIONS ARE IN INCHES. DO NOT SCALE.

TOLERANCES		
2 PLACE	3 PLACE	ANGLES
± .01	± .005	± .5°

MATERIAL: NONE

FINISH: NONE

UNIVERSAL POWER CORD HANDPIECE

F.S.C.M. NO. 17794

DWG. NO. R7000-0023

REF. SCALE 2/1 | SK – | SHEET 1 OF 1

1W2 7000-0023

CAD 1 INC. 301-565-3340 567623

PACE INCORPORATED

PROPRIETARY PARTS LIST

The data in this proposal shall not be used or disclosed, except for evaluation purposes, provided that if a contract is awarded to this submitter as a result of or in connection with the submission of this proposal, the Government shall have the right to use or disclose this technical data to the extent provided in the contract. This restriction does not limit the Government's right to use or disclose any technical data which is not proprietary to the submitter or is obtained from another source without restriction.

DWG. NO: R8040-0001 REV: A EC NO: 3759 DATE: 3/4/94 APP:

AMENDED P/L FORMAT: 8/23/94

TITLE: HOT SPOT 150 W/ACCESSORIES

INDEX	REFERENCE NO.	PART NO.	DESCRIPTION	FSCM	QTY
REF	2	8040-0001	HOT SPOT 150 W/ACCESSORIES	17794	REF
1	2A1	7040-0002	HOT SPOT 150	17794	1
2	2A2	6040-0002	ASSY, CLAMP ARM	17794	1
3	2A3	6993-0102	ASSY, THERMAL SELECTIVITY	17794	1
4		5050-0194	MANUAL, HOTSPOT 150	17794	1

REVISIONS				
LEVEL	AUTHORIZATION	DFT ENG	MFG ENG	ANTICIPATED DEPARTMENTAL APPROVALS
A	EC 3759	C. CANDINO	M. PANT	07/01/88

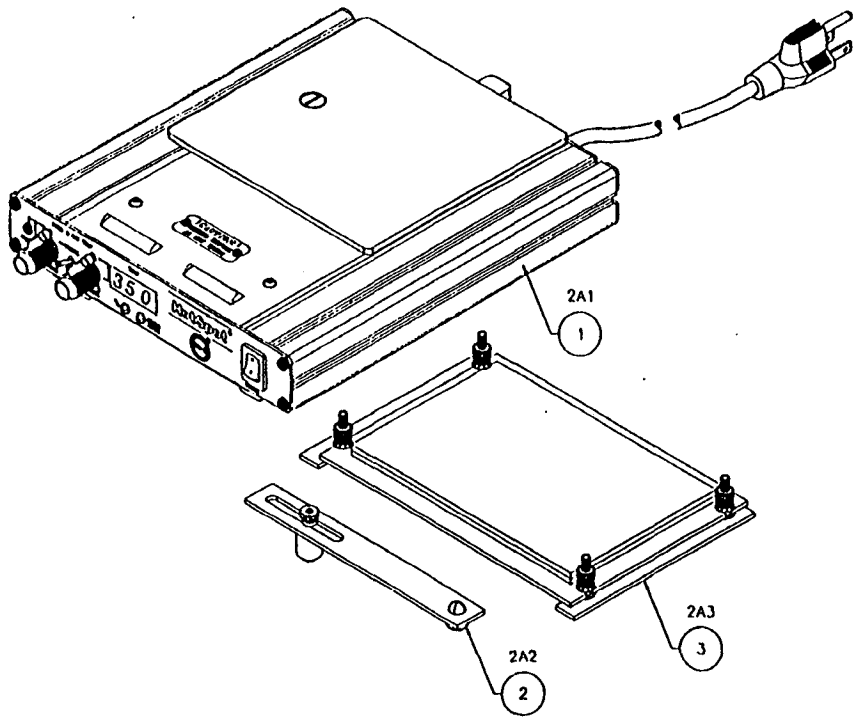

The data in this proposal shall not be used or disclosed, except for evaluation purposes, provided that if a contract is awarded to this submitter as a result of or in connection with the submission of this proposal, the Government shall have the right to use or disclose this technical data to the extent provided in the contract. This restriction does not limit the Government's right to use or disclose any technical data which is not proprietary to the submitter or is obtained from another source without restriction.

PROPRIETARY ASSEMBLY DRAWING

THIS DRAWING CONTAINS INFORMATION PROPRIETARY TO PACE INC. ANY REPRODUCTION, DISCLOSURE OR USE OF THIS DRAWING IS EXPRESSLY PROHIBITED EXCEPT AS PACE INC. MAY OTHERWISE AGREE IN WRITING.

PACE

Systems for Development, Production and Repair of Electronic Assemblies

UNLESS OTHERWISE SPECIFIED DIMENSIONS ARE IN INCHES DO NOT SCALE

TOLERANCES		
2 PLACE	3 PLACE	ANGLES
± .01	± .005	± .5°

MATERIAL

FINISH

HOT SPOT 150 W/ACCESSORIES

FSCM NO.	DWG NO.
17794	R8040-0001

REF SCALE 1/1 | SH | SHEET 1 OF 1

8040-0001

PAGE® INCORPORATED

PROPRIETARY PARTS LIST

The data in this proposal shall not be used or disclosed, except for evaluation purposes, provided that if a contract is awarded to this submitter as a result of or in connection with the submission of this proposal, the Government shall have the right to use or disclose this technical data to the extent provided in the contract. This restriction does not limit the Government's right to use or disclose any technical data which is not proprietary to the submitter or is obtained from another source without restriction.

DWG. NO: R7040-0002 REV: A EC NO: 3759 DATE: 3/4/94 APP:

AMENDED P/L FORMAT: 8/23/94

TITLE: HOT SPOT 150

INDEX	REFERENCE NO.	PART NO.	DESCRIPTION	FSCM	QTY
REF	2A1	7040-0002	HOT SPOT 150	17794	REF
1	2A1A1	6040-0001	SURFACE PLATE/HTR. ASSY	17794	1
2	2A1A2	6020-0070	PCB UNIT, MAIN/DISPLAY	17794	1
3-5			ITEM NUMBERS NOT USED		
6	2A1F1	1159-0221 FST034.3122 2183.15	FUSE, 3.15A S.B.	17794 61935 7E222	1
7	2A1H1	1405-0569 GENERIC	SCREW, HEX HD.,#6-32 X 1/2" LG.	17794 ZZZ	1
8	2A1H2	1405-0569 GENERIC	SCREW, HEX HD.,#6-32 X 1/2" LG.	17794 ZZZ	3
9	2A1 H3	1405-0031 GENERIC	SCREW, BINDERHD.,#6-32 X 1/2" LG.	17794 ZZZ	6
10	2A1H4	1405-0572 GENERIC	SCREW, FLAT HD.,#8-32 X 3/8"LG.	17794 ZZZ	4
11A	2A1H5	1405-0570	SCREW, HEX HD.,#8-32 X 5/8" LG.	17794	1
11B	2A1H6	1405-0570	SCREW, HEX HD.,#8-32 X 5/8" LG.	17794	4
12	2A1H7	1410-0088 GENERIC	NUT, HEX, #6-32	17794 ZZZ	6
13A	2A1H8	1410-0021 GENERIC	NUT, W/LOCKWASHER, #8-32	17794 ZZZ	4
13B	2A1H9	1410-0021 GENERIC	NUT, W/LOCKWASHER, #8-32	17794 ZZZ	2
14	2A1H10	1405-0530 GENERIC	SCREW, BLK.,BUTTON HD. #6-32 X 1/4"LG.	17794 ZZZ	2
15A	2A1H11	1415-0054 TE-7871-141	WASHER, FLAT, 7/16" DIA.	17794 0GCW4	1

DWG. NO: R7040-0002 REV: A EC NO: 3759 DATE: 3/4/94 APP:

AMENDED P/L FORMAT: 8/23/94

TITLE: HOT SPOT 150

INDEX	REFERENCE NO.	PART NO.	DESCRIPTION	FSCM	QTY
15B	2A1H12	1415-0054 TE-7871-141	WASHER, FLAT, 7/16" DIA.	17794 0GCW4	3
16A	2A1H13	1420-0001 GENERIC	RIVET, .093 X 1/4"	17794 ZZZ	2
16B	2A1H14	1420-0001 GENERIC	RIVET, .093 X 1/4"	17794 ZZZ	2
17A	2A1H15	1405-0571 GENERIC	SCREW, THREAD FORMING,PAN HD.,#8-32 X .38"LG.	17794 ZZZ	4
17B	2A1H16	1405-0571 GENERIC	SCREW, THREAD FORMING,PAN HD.,#8-32 X .38"LG.	17794 ZZZ	4
18	2A1H17	1405-0466-04 GENERIC	SCREW, NYLON, #4-40 X .312" LG.	17794 ZZZ	1
19-25			ITEM NUMBERS NOT USED		
26	2A1J31	1207-0179 SJ-151 (12mm)	JACK SUBMINIATURE	17794 ZZZ	1
27	2A1MP1	1335-0074	SUPPORT PLATE ASSY	17794	1
28A	2A1MP2	2320-0015	EXTRUSION	17794	1
28B	2A1MP3	2320-0015	EXTRUSION	17794	1
29	2A1MP4	1257-0107	LOCKING PLATE	17794	1
30	2A1MP5	1313-0102	COVER, BOTTOM	17794	1
31	2A1MP6	1313-0103	COVER, TOP	17794	1
32	2A1MP7	1215-0086	SPACER, SPECIAL, LOCKING	17794	4
33	2A1MP8	1221-0086	SPRING, SPECIAL, 1.120"LG	17794	4
34	2A1MP9	1251-0043	COLLAR	17794	1
35	2A1MP10	1215-0087	SPACER, SPECIAL	17794	1
36	2A1MP11	1209-0026	GRIP, VINYL,RED	17794	1
37	2A1MP12	5002-0009	INSULATOR, FISH PAPER	17794	1
38	2A1MP13	1351-0479	LABEL, CAUTION, SURFACE	17794	1
39	2A1MP14	1257-0114	BRACKET	17794	1
40	2A1MP15	1215-0088 A-3902-832-0	STANDOFF, 1/4" HEX X 1/4"LG.	17794 0GCW4	4
41	2A1MP16	1274-0029 1343-W0437-26012	BUMPER	17794 70485	6

DWG. NO: R7040-0002 REV: A EC NO: 3759 DATE: 3/4/94 APP:
AMENDED P/L FORMAT: 8/23/94

TITLE: HOT SPOT 150

INDEX	REFERENCE NO.	PART NO.	DESCRIPTION	FSCM	QTY
42	2A1MP17	1215-0089 A-3911-632-0	STANDOFF, 1/4" HEX X .81" LG.	17794 0GCW4	3
43	2A1MP18	1415-0027	LOCKING PLATE	17794	1
44	2A1MP19	1215-0090 A-3910-632-0	STANDOFF, 1/4" HEX X 3/4" LG.	17794 0GCW4	1
45	2A1MP20	1335-0132	PANEL, REAR	17794	1
46	2A1MP21	1215-0093	SPACER	17794	1
47	2A1MP22	1101-0001 3772 (BLACK)	STRAIN RELIEF, BUSHING	17794 28520	1
48	2A1MP23	1346-0010 FIT 221-1/8"	TUBING, HEAT SHRINK,1/8" (QTY 2@1/2"EACH)	17794 92194	1"
49	2A1MP24	1335-0077	PANEL, FRONT W/STUD	17794	1
50	2A1MP25	1351-0474	OVERLAY, FRONT PANEL	17794	1
51A	2A1MP26	1222-0043 GR-50P-2	KNOB, POINTER TYPE, 1/8" DIA, SHAFT	17794 86797	1
51B	2A1MP27	1222-0043 GR-50P-2	KNOB, POINTER TYPE, 1/8" DIA, SHAFT	17794 86797	1
52A	2A1MP28	1171-0006 5081-3	CAP, SWITCH, MOMENTARY, RED	17794 ZZZ	1
52B	2A1MP29	1171-0006 5081-3	CAP, SWITCH, MOMENTARY, RED	17794 ZZZ	1
53A	2A1MP30	1346-0021 FIT 221-3/32"	TUBING, HEAT SHRINK, 3/32" (QTY 8@1/2"LG.EACH)	17794 92194	4"
53B	2A1MP31	1346-0021 FIT 221-3/32"	TUBING, HEAT SHRINK, 3/32" (QTY 2@1/2"LG.EACH)	17794 92194	1"
54	2A1MP32	1351-0472	LABEL, S/N, HOT SPOT 150	17794	1
55-60			ITEM NUMBERS NOT USED		
61	2A1SW1	1157-0052 6-221-5-919-0-9-V	SWITCH, MINIATURE, W/HIGH BARRIER	17794 73559	1
62	2A1SW2	1157-0051 JMT-323 (MODEL: TOG-323)	SWITCH, TOGGLE, 3 PDT	17794 9A069	1
63	2A1SW3	1157-0050 JMT-123 (MODEL: TOG-123)	SWITCH, TOGGLE, SPDT	17794 9A069	1
64	2A1W1	3008-0014	WIRE HARNESS, HOT SPOT	17794	1

DWG. NO: R7040-0002 REV: A EC NO: 3759 DATE: 3/4/94 APP:

AMENDED P/L FORMAT: 8/23/94

TITLE: HOT SPOT 150

INDEX	REFERENCE NO.	PART NO.	DESCRIPTION	FSCM	QTY
65	2A1W2	1332-0113	POWER CORD, HOT SPOT	17794	1
66	2A1XF1	1161-0008 FEF 031-1081	FUSE HOLDER	17794 61935	1

BLANK

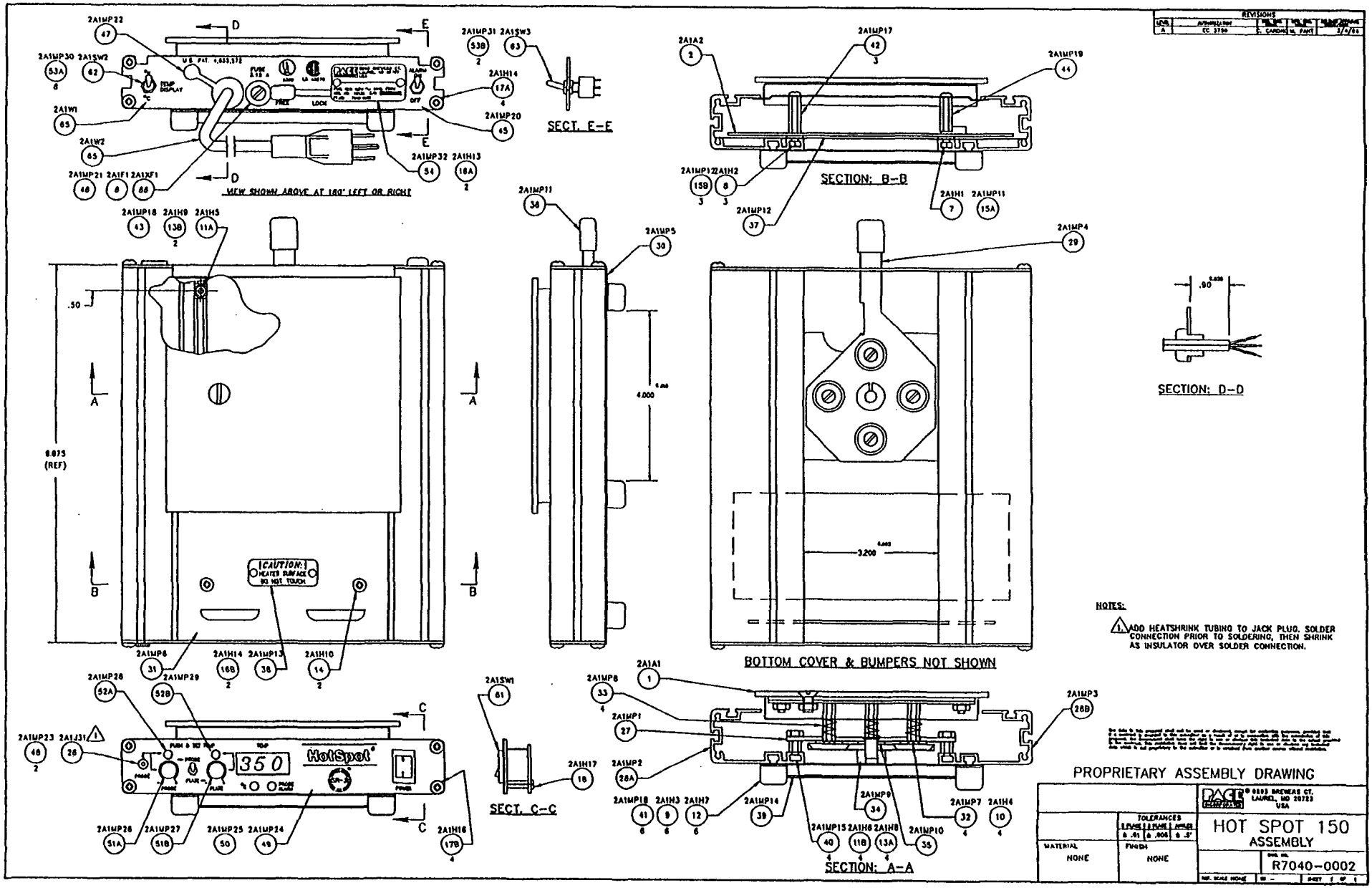
VIEW SHOWN ABOVE AT 180° LEFT OR RIGHT
SECT. E-E
SECTION: B-B
SECTION: D-D
BOTTOM COVER & BUMPERS NOT SHOWN
SECT. C-C
SECTION: A-A
NOTES:
1. ADD HEATSHRINK TUBING TO JACK PLUG. SOLDER CONNECTION PRIOR TO SOLDERING, THEN SHRINK AS INSULATOR OVER SOLDER CONNECTION.
PROPRIETARY ASSEMBLY DRAWING
HOT SPOT 150 ASSEMBLY
R7040-0002
MATERIAL NONE
FINISH NONE
TOLERANCES
REVISIONS

PAGE® INCORPORATED

PROPRIETARY PARTS LIST

The data in this proposal shall not be used or disclosed, except for evaluation purposes, provided that if a contract is awarded to this submitter as a result of or in connection with the submission of this proposal, the Government shall have the right to use or disclose this technical data to the extent provided in the contract. This restriction does not limit the Government's right to use or disclose any technical data which is not proprietary to the submitter or is obtained from another source without restriction.

DWG. NO: R6040-0001 REV: A EC NO: 3759 DATE: 3/4/94 APP:

AMENDED P/L FORMAT: 8/23/94

TITLE: SURFACE PLATE/HTR.. ASSY

INDEX	REFERENCE NO.	PART NO.	DESCRIPTION	FSCM	QTY
REF	2A1A1	6040-0001	SURFACE PLATE/HTR. ASSY	17794	REF

DWG NO.
B

REVISIONS				
LEVEL	AUTHORIZATION	DES. ENG. INITIAL	MFG. ENG. INITIAL	RELEASE APPROVAL INITIAL/DATE
A	EC 3759	C. CARDNO	M. PANT	3/4/94

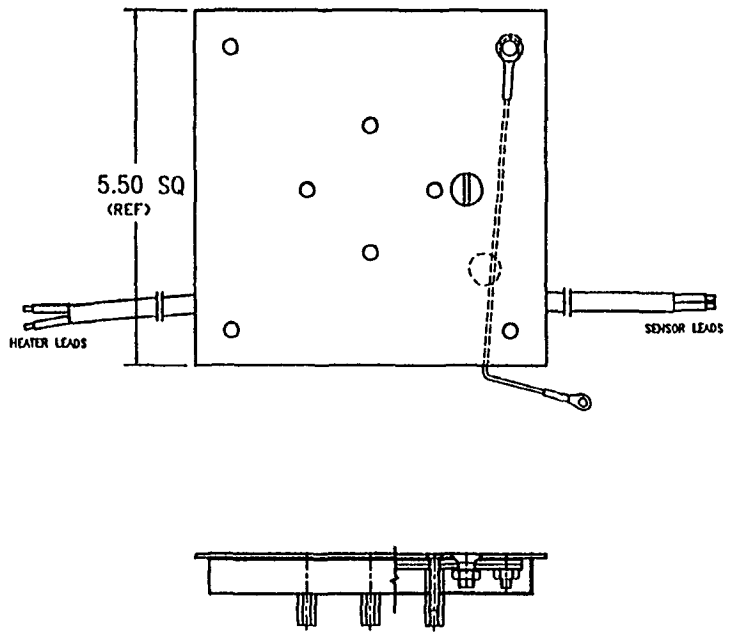

The data in this proposal shall not be used or disclosed, except for evaluation purposes, provided that if a contract is awarded to this submitter as a result of or in connection with the submission of this proposal, the Government shall have the right to use or disclose this technical data to the extent provided in the contract. This restriction does not limit the Government's right to use or disclose any technical data which is not proprietary to the submitter or is obtained from another source without restriction.

PROPRIETARY ASSEMBLY DRAWING

THIS DRAWING CONTAINS INFORMATION PROPRIETARY TO PACE INC.. ANY REPRODUCTION, DISCLOSURE OR USE OF THIS DRAWING IS EXPRESSLY PROHIBITED EXCEPT AS PACE INC. MAY OTHERWISE AGREE IN WRITING.

UNLESS OTHERWISE SPECIFIED DIMENSIONS ARE IN INCHES. DO NOT SCALE.

TOLERANCES		
2 PLACE	3 PLACE	ANGLES
± .01	± .005	± .5°

MATERIAL: NONE

FINISH: NONE

PACE®
PACE, Incorporated
9803 Brewers Court
Laurel, MD 20723, U.S.A.
TEL (301) 490-9860 FAX (301) 604-3180
Systems for Development, Production, and Repair of Electronic Assemblies

SURFACE PLATE AND HEATER ASS'Y

F.S.C.M. NO. 17794

DWG. NO. R6040-0001

REF. SCALE 1/1 | SK – | SHEET 1 OF 1

2A1A1 6040-0001

CAD 1 INC. 301-565-3340 567825

PACE® INCORPORATED

PROPRIETARY PARTS LIST

The data in this proposal shall not be used or disclosed, except for evaluation purposes, provided that if a contract is awarded to this submitter as a result of or in connection with the submission of this proposal, the Government shall have the right to use or disclose this technical data to the extent provided in the contract. This restriction does not limit the Government's right to use or disclose any technical data which is not proprietary to the submitter or is obtained from another source without restriction.

DWG. NO: R6020-0070 REV: A EC NO: 3759 DATE: 3/4/94 APP:

AMENDED P/L FORMAT: 8/23/94

TITLE: PCB UNIT, MAIN/DISPLAY

INDEX	REFERENCE NO.	PART NO.	DESCRIPTION	FSCM	QTY
REF	2A1A2	6020-0070	PCB UNIT, MAIN/DISPLAY	17794	REF
1	2A1A2A1	6020-0042	PCB ASSY, MAIN	17794	1
2	2A1A2A2	6020-0043	PCB ASSY, DISPLAY	17794	1

DWG NO.
B

REVISIONS				
LEVEL	AUTHORIZATION	DES. ENG. INITIAL	MFG. ENG. INITIAL	RELEASE APPROVAL INITIAL/DATE
A	EC 3759	C. CARDNO	M. PANT	3/4/94

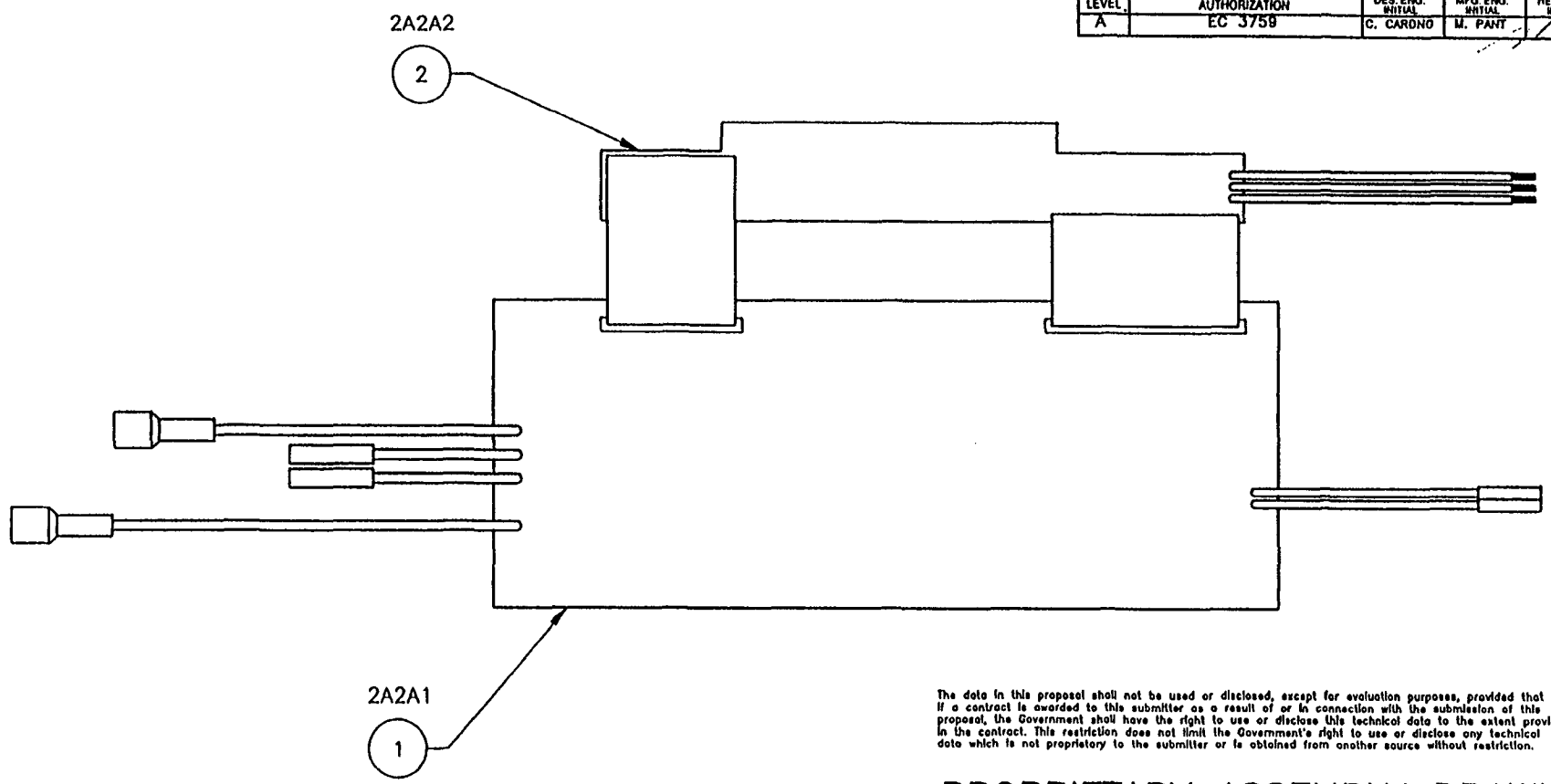

The data in this proposal shall not be used or disclosed, except for evaluation purposes, provided that if a contract is awarded to this submitter as a result of or in connection with the submission of this proposal, the Government shall have the right to use or disclose this technical data to the extent provided in the contract. This restriction does not limit the Government's right to use or disclose any technical data which is not proprietary to the submitter or is obtained from another source without restriction.

PROPRIETARY ASSEMBLY DRAWING

NOTE:
ITEM 1 AND ITEM 2 TO BE CALIBRATE AS SET.

CAUTION
SENSITIVE ELECTRONIC DEVICES
DO NOT SHIP OR STORE NEAR STRONG
ELECTROSTATIC, ELECTROMAGNETIC,
MAGNETIC OR RADIOACTIVE FIELDS

THIS DRAWING CONTAINS INFORMATION PROPRIETARY TO PACE INC.. ANY REPRODUCTION, DISCLOSURE OR USE OF THIS DRAWING IS EXPRESSLY PROHIBITED EXCEPT AS PACE INC. MAY OTHERWISE AGREE IN WRITING.

UNLESS OTHERWISE SPECIFIED DIMENSIONS ARE IN INCHES. DO NOT SCALE.

TOLERANCES		
2 PLACE	3 PLACE	ANGLES
± .01	± .005	± .5°

MATERIAL
NONE

FINISH
NONE

PACE (c) PACE, Incorporated
9893 Brewers Court
Laurel, MD 20723, U.S.A.
TEL (301) 490-9860 FAX (301) 604-3180
Systems for Development, Production, and Repair of Electronic Assemblies

PCB UNIT
MAIN/DISPLAY

F.S.C.M. NO.	DWG. NO.
17794	R6020–0070

REF. SCALE 1/1 | SK – | SHEET 1 OF 1

2A1A2 6020-0070

CAD 1 INC. 301-585-3340 547825

PAGE® INCORPORATED

PROPRIETARY PARTS LIST

The data in this proposal shall not be used or disclosed, except for evaluation purposes, provided that if a contract is awarded to this submitter as a result of or in connection with the submission of this proposal, the Government shall have the right to use or disclose this technical data to the extent provided in the contract. This restriction does not limit the Government's right to use or disclose any technical data which is not proprietary to the submitter or is obtained from another source without restriction.

DWG. NO: R6020-0042 REV: A EC NO: 3759 DATE: 3/4/94 APP:

AMENDED P/L FORMAT: 8/23/94

TITLE: PCB ASSY, MAIN

INDEX	REFERENCE NO.	PART NO.	DESCRIPTION	FSCM	QTY
REF	2A1A2A1	6020-0042	PCB ASSY, MAIN	17794	REF
1	2A1A2A1B1	1187-0042	PIEZO ALARM(B1)	17794	1
		PKB8-4A0		51406	
2	2A1A2A1C1,C2	1181-0082	CAPACITOR, 150pF,50V(C1,C2)	17794	2
		K151J15C0GFVAWA		59821	
3	2A1A2A1C3	1181-0060	CAPACITOR, .1uF,50V(C3)	17794	1
		923CZ5U103M050B		56289	
		P103M26Z5UFVPWA		59821	
4	2A1A2A1C4,C5,C6	1181-0093	CAPACITOR, 10uF,35V,TANTALUM(C4,C5,C6)	17794	3
		TAP106M035S		04222	
		T350G106M035AS		31433	
5	2A1A2A1C7	1181-0076	CAPACITOR, 220uF,25V(C7)	17794	1
		UVX221VMPA		55680	
		VTL220S25		ZZZ	
		3475GD221M025JMBS		ZZZ	
6	2A1A2A1C8	1181-0075	CAPACITOR, 470uF,25V(C8)	17794	1
		SME25VB471M10X16LL		62643	
		UVX1E471MPA		55680	
		NRSA471M25V10X16		0EHX1	
7-15			ITEM NUMBERS NOT USED		
16	2A1A2A1CR2	1196-0008	IC., BRIDGE RECTIFIER(CR2)	17794	1
		GENERIC		ZZZ	
17-20			ITEM NUMBERS NOT USED		
21	2A1A2A1E11	1300-0002-10	JUMPER, 1.00" BROWN(E11-E14)	17794	1
		J1000X0250T22		ZZZ	
22	2A1A2A1E12	1300-0002-03	JUMPER, .30" ORANGE(E12-E13)	17794	1
		J0300X0250T22		ZZZ	
23-25			ITEM NUMBERS NOT USED		

DWG. NO: R6020-0042 REV: A EC NO: 3759 DATE: 3/4/94 APP:

AMENDED P/L FORMAT: 8/23/94

TITLE: PCB ASSY, MAIN

INDEX	REFERENCE NO.	PART NO.	DESCRIPTION	FSCM	QTY
26	2A1A2A1J11	1207-0187 643647-6	CONNECTOR, 15 CONDUCTOR(J11)	17794 09769	1
27	2A1A2A1J12	1207-0188 643642-6	CONNECTOR, 10 CONDUCTOR(J12)	17794 09769	1
28	2A1A2A1J13	1207-0119-04 22-23-2101	CONNECTOR, 10 CONDUCTOR(J13)	17794 27264	1
29	2A1A2A1J14	1207-0189 102943-3	HEADER, 3 POS., .100"CTR.(J14)	17794 09769	1
30-35			ITEM NUMBERS NOT USED		
36	2A1A2A1L1	1207-0186 2-530153-2	SHUNT, 2 POSITION	17794 04618	1
37-40			ITEM NUMBERS NOT USED		
41	2A1A2A1Q1	1189-0036 T0810DJ Q4008L4	IC., TRIAC,TO810DJ(Q1)	17794 ZZZ 58079	1
42	2A1A2A1Q3	1187-0062 PN2906	TRANSISTOR, PNP PN2906(Q3)	17794 27014	1
43	2A1A2A1Q4	1187-0080	TRANSISTOR, P-CHANNEL MOSFET(Q4)	17794	1
44-50			ITEM NUMBERS NOT USED		
51	2A1A2A1R1	1179-0156 GENERIC	RESISTOR, 120 OHMS, 1/2W,5%(R1)	17794 ZZZ	1
52	2A1A2A1R2	1179-0134-03 GENERIC	RESISTOR, 1 KOHM, 1/4W,5%(R2)	17794 ZZZ	1
53	2A1A2A1R3,R6,R23	1179-0177-01 CMF-55-243kohm, F, T-2 RG243kohm, T2-55, 1% CRB25-243kohm-F-Y	RESISTOR, 243 KOHM, 1/8W,1%(R3,R6,R23)	17794 91637 11502 OUST1	3
54	2A1A2A1R4,R5,R21,R22	1179-0177-05 CMF-55-30.1kohm, F, T-2 RG30.1kohm, T2-55, 1% CRB25-30.1kohm-F-Y	RESISTOR, 30.1 KOHM, 1/8W,1%(R4,R5,R21,R22)	17794 91637 11502 OUST1	4

DWG. NO: R6020-0042 REV: A EC NO: 3759 DATE: 3/4/94 APP:
AMENDED P/L FORMAT: 8/23/94

TITLE: PCB ASSY, MAIN

INDEX	REFERENCE NO.	PART NO.	DESCRIPTION	FSCM	QTY
55	2A1A2A1R7,R24	1179-0177-09 CMF-55-1kohm, F, T-2 RG1kohm, T2-55, 1% CRB25-1kohm-F-Y	RESISTOR, 1 KOHM, 1/8W,1%(R7,R24)	17794 91637 11502 OUST1	2
56	2A1A2A1R9	1179-0177-03 CMF-55-45.3kohm, F, T-2 RG45.3kohm, T2-55, 1% CRB25-45.3kohm-F-Y	RESISTOR, 45.3 KOHM, 1/8W,1%(R9)	17794 91637 11502 OUST1	1
57	2A1A2A1R10	1179-0177-24 CMF-55-14.7kohm, F, T-2 RG14.7kohm, T2-55, 1% CRB25-14.7kohm-F-Y	RESISTOR, 14.7 KOHM, 1/8W,1%(R10)	17794 91637 11502 OUST1	1
58	2A1A2A1R11,R15	1179-0177-06 CMF-55-10kohm, F, T-2 RG10kohm, T2-55, 1% CRB25-10kohm-F-Y	RESISTOR, 10 KOHM, 1/8W,1%(R11,R15)	17794 91637 11502 OUST1	2
59	2A1A2A1R12	1179-0177-04 CMF-55-40.2kohm, F, T-2 RG40.2kohm, T2-55, 1% CRB25-40.2kohm-F-Y	RESISTOR, 40.2 KOHM, 1/8W,1%(R12)	17794 91637 11502 OUST1	1
60	2A1A2A1R13,R14	1179-0177-10 CMF-55-750ohm, F, T-2 RG750ohm, T2-55, 1% CRB25-750ohm-F-Y	RESISTOR, 750 OHM, 1/8W,1%(R13,R14)	17794 91637 11502 OUST1	2
61	2A1A2A1R16,R17	1179-0177-12 CMF-55-249ohm, F, T-2 RG249ohm, T2-55, 1% CRB25-249ohm-F-Y	RESISTOR, 249 OHM, 1/8W,1%(R16,R17)	17794 91637 11502 OUST1	2
62	2A1A2A1R18,R19	1179-0177-23 CMF-55-7.68kohm, F, T-2 RG7.68kohm, T2-55, 1% CRB25-7.68kohm-F-Y	RESISTOR, 7.68 KOHM, 1/8W,1%(R18,R19)	17794 91637 11502 OUST1	2
63	2A1A2A1R20	1179-0134-01 GENERIC	RESISTOR, 100 OHMS, 1/4W,5%(R20)	17794 ZZZ	1

DWG. NO: R6020-0042 REV: A EC NO: 3759 DATE: 3/4/94 APP: M

AMENDED P/L FORMAT: 8/23/94

TITLE: PCB ASSY, MAIN

INDEX	REFERENCE NO.	PART NO.	DESCRIPTION	FSCM	QTY
64	2A1A2A1R25	1179-0177-02 CMF-55-221kohm, F, T-2 RG221kohm, T2-55, 1% CRB25-221kohm-F-Y	RESISTOR, 221 KOHM, 1/8W,1%(R25)	17794 91637 11502 OUST1	1
65	2A1A2A1R26,R32	1179-0134-15 GENERIC	RESISTOR, 10 KOHMS, 1/4W,5%(R26,R32)	17794 ZZZ	2
66	2A1A2A1R27	1179-0134-36 GENERIC	RESISTOR, 22 KOHM, 1/4W,5%(R27)	17794 ZZZ	1
67	2A1A2A1R28	1179-0134-51 GENERIC	RESISTOR, 430 OHMS,1/4W,5%(R28)	17794 ZZZ	1
68	2A1A2A1R31	1179-0134-53 GENERIC	RESISTOR, 3.3 KOHMS, 1/4W,5%(R31)	17794 ZZZ	1
69	2A1A2A1R33	1179-0134-38 GENERIC	RESISTOR, 200 OHMS, 1/4W,5%(R33)	17794 ZZZ	1
70	2A1A2A1R34,R35,R37,R38	1179-0170 3299W-1-501	TRIM POT, 500 OHM,10%(R34,R35,R37,R38)	17794 32997	4
71	2A1A2A1R36	1179-0162 3299W-1-103	TRIM POT, 10 KOHM,10%(R36)	17794 32997	1
72	2A1A2A1R39	1179-0176 3299W-1-503	TRIM POT,50 KOHM,10%(R39)	17794 32997	1
73	2A1A2A1R40	1179-0134-27 GENERIC	RESISTOR, 680 KOHMS, 1/4W,5%(R40)	17794 ZZZ	1
74-80			ITEM NUMBERS NOT USED		
81	2A1A2A1T1	1192-0056 LP24-250	TRANSFORMER, 12V @ 5OOmA(T1)	17794 SIGNA	1
82	2A1A2A1U1	1189-0037 MOC3041	IC., OPTO-TRIAC,MOC3041(U1)	17794 8Z393	1
83	2A1A2A1U2	1187-0063 LM324AN LM434AN LM324AN	IC., QUAD OPAMP, LM324AN(U2)	17794 27014 01295 04713	1
84	2A1A2A1U3	1187-0060 LM10CN	IC., OPAMP,LM10CN(U3)	17794 27014	1

DWG. NO: R6020-0042 REV: A EC NO: 3759 DATE: 3/4/94 APP:

AMENDED P/L FORMAT: 8/23/94

TITLE: PCB ASSY, MAIN

INDEX	REFERENCE NO.	PART NO.	DESCRIPTION	FSCM	QTY
85	2A1A2A1U4	1187-0058 ICL7660CPA	IC., VOLTAGE CONVERTER(U4)	17794 34371	1
86	2A1A2A1U5	1187-0039 LM340T-5 LM340-5	IC., +5V REGULATOR,LM340-5(U5)	17794 27014 01295	1
87-95			ITEM NUMBERS NOT USED		
96	2A1A2A1W1	3008-0015	WIRE HARNESS, MAIN	17794	1

REVISIONS				
LEVEL	AUTHORIZATION	DR & ENG action	MFG ENG action	RELEASE DATE authorization
A	EC 3759	C.CARDINO	U.PANT	11/03/01/84

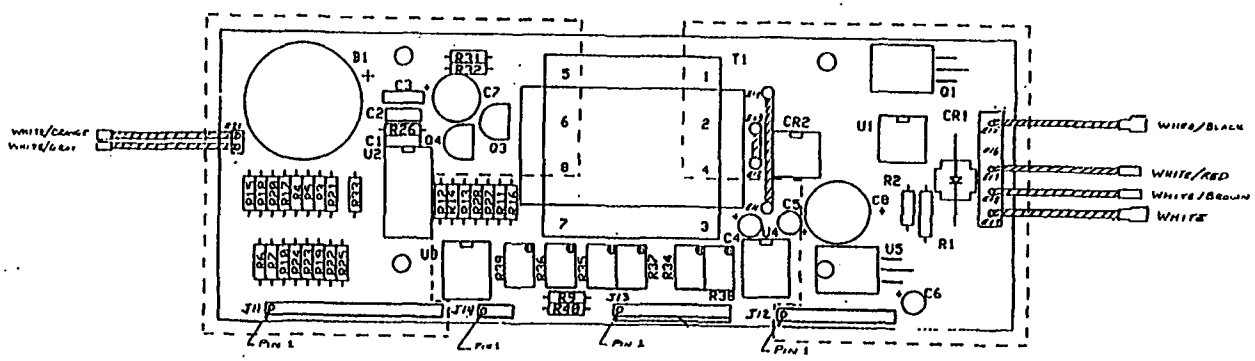

CAUTION

SENSITIVE ELECTRONIC DEVICES
DO NOT SHIP OR STORE NEAR STRONG
ELECTROSTATIC, ELECTROMAGNETIC,
MAGNETIC OR RADIOACTIVE FIELDS

The data in this proposal shall not be used or disclosed except for evaluation purposes, provided that if a contract is awarded to this submitter as a result of or in connection with the submission of this proposal, the Government shall have the right to use or disclose this technical data to the extent provided in the contract. This restriction does not limit the Government's right to use or disclose any technical data which is not proprietary to the submitter or is obtained from another source without restriction.

PROPRIETARY ASSEMBLY DRAWING

THIS DRAWING CONTAINS INFORMATION PROPRIETARY TO PACE INC. ANY REPRODUCTION, DISCLOSURE OR USE OF THIS DRAWING IS EXPRESSLY PROHIBITED EXCEPT AS PACE INC MAY OTHERWISE AGREE IN WRITING

PACE

UNLESS OTHERWISE SPECIFIED DIMENSIONS ARE IN INCHES. DO NOT SCALE.	TOLERANCES		
	2 PLACE	3 PLACE	ANGLES
	±.01	±.005	±.5°
MATERIAL	FINISH		

PCB ASSEMBLY
MAIN

FSCM NO	DWG NO
17794	R6020-0042

REF SCALE — | SK | SHEET 1 OF 1

2A1A2A1 6020-0042

PACE® INCORPORATED

PROPRIETARY PARTS LIST

The data in this proposal shall not be used or disclosed, except for evaluation purposes, provided that if a contract is awarded to this submitter as a result of or in connection with the submission of this proposal, the Government shall have the right to use or disclose this technical data to the extent provided in the contract. This restriction does not limit the Government's right to use or disclose any technical data which is not proprietary to the submitter or is obtained from another source without restriction.

DWG. NO: R3008-0015 REV: A EC NO: 3759 DATE: 3/4/94 APP:

AMENDED P/L FORMAT: 8/23/94

TITLE: WIRE HARNESS, MAIN, HOT SPOT

INDEX	REFERENCE NO.	PART NO.	DESCRIPTION	FSCM	QTY
REF	2A1A2A1W1	3008-0015	WIRE HARNESS, MAIN, HOT SPOT	17794	REF

DWG NO.
B

REVISIONS				
LEVEL	AUTHORIZATION	DES. ENG. INITIAL	MFG. ENG. INITIAL	RELEASE APPROVAL INITIAL/DATE
A	EC 3759	C. CARDNO	M. PANT	3/4/94

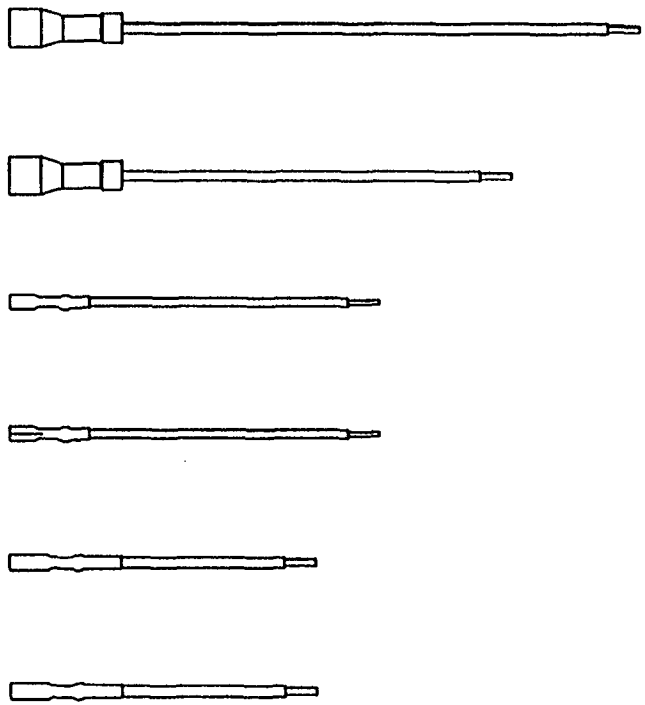

The data in this proposal shall not be used or disclosed, except for evaluation purposes, provided that if a contract is awarded to this submitter as a result of or in connection with the submission of this proposal, the Government shall have the right to use or disclose this technical data to the extent provided in the contract. This restriction does not limit the Government's right to use or disclose any technical data which is not proprietary to the submitter or is obtained from another source without restriction.

PROPRIETARY SOURCE CONTROL DRAWING

THIS DRAWING CONTAINS INFORMATION PROPRIETARY TO PACE INC.. ANY REPRODUCTION, DISCLOSURE OR USE OF THIS DRAWING IS EXPRESSLY PROHIBITED EXCEPT AS PACE INC. MAY OTHERWISE AGREE IN WRITING.

UNLESS OTHERWISE SPECIFIED DIMENSIONS ARE IN INCHES. DO NOT SCALE.

TOLERANCES		
2 PLACE	3 PLACE	ANGLES
± .01	± .005	± .5°

MATERIAL
–

FINISH
–

PACE®
PACE, Incorporated
9003 Brewers Court
Laurel, MD 20723, U.S.A.
TEL (301) 490 9080 FAX (301) 604-3180
Systems for Development, Production, and Repair of Electronic Assemblies

WIRE HARNESS
MAIN, HOT SPOT

F.S.C.M. NO.	DWG. NO.
17794	R3008–0015

REF. SCALE 1/2 | SK – | SHEET 1 OF 1

2A1A2A1W1 3008-0015

CAD 1 INC. 301-565-3340 567825

PACE® INCORPORATED

PROPRIETARY PARTS LIST

The data in this proposal shall not be used or disclosed, except for evaluation purposes, provided that if a contract is awarded to this submitter as a result of or in connection with the submission of this proposal, the Government shall have the right to use or disclose this technical data to the extent provided in the contract. This restriction does not limit the Government's right to use or disclose any technical data which is not proprietary to the submitter or is obtained from another source without restriction.

DWG. NO: R6020-0043 REV: A EC NO: 3759 DATE: 3/4/94 APP:

AMENDED P/L FORMAT: 8/23/94

TITLE: PCB ASSY, DISPLAY

INDEX	REFERENCE NO.	PART NO.	DESCRIPTION	FSCM	QTY
REF	2A1A2A2	6020-0043	PCB ASSY, DISPLAY	17794	REF
1	2A1A2A2C1	1181-0083	CAPACITOR, .01uF, 50V(C1)	17794	1
		923CZ5U103M050B		56289	
		P103M26Z5UFVPWA		59821	
2	2A1A2A2C2	1181-0092	CAPACITOR, .47uF, 63V(C2)	17794	1
		MKT1817447065		4U402	
3	2A1A2A2C3	1181-0091	CAPACITOR. .15uF. 63V(C3)	17794	1
		MKT1817415065		4U402	
4	2A1A2A2C4	1181-0060	CAPACITOR, .1uF, 50V(C4)	17794	1
		923CZ5U103M050B		56289	
		P103M26Z5UFVPWA		59821	
5	2A1A2A2C5	1181-0087	CAPACITOR, 390pF, 50V(C5)	17794	1
		MD015A391JAA		04222	
6-10			ITEM NUMBERS NOT USED		
11	2A1A2A2D1,D2,D3	1183-0034	DISPLAY, 7-SEGMENT,LED(D1,D2,D3)	17794	3
		SEA3111		ZZZ	
		5082-7611		28480	
12	2A1A2A2D4,D5	1183-0035	LED, DIFFUSED,RED(D4,D5)	17794	2
		ID5753		53763	
		SE5051D		ZZZ	
		HLMP-4601		28480	
13-20			ITEM NUMBERS NOT USED		
21	2A1A2A2J1	1332-0119	CABLE, FLAT, 15 CONDUCTOR(J1)	17794	1
		1-88665-4		09769	
		15-002-171		51167	
22	2A1A2A2J2	1332-0120	CABLE, FLAT. 10 CONDUCTOR(J2)	17794	1
		86942-9		09769	
		10-002.5-171		51167	

DWG. NO: R6020-0043 REV: A EC NO: 3759 DATE: 3/4/94 APP:

AMENDED P/L FORMAT: 8/23/94

TITLE: PCB ASSY, DISPLAY

INDEX	REFERENCE NO.	PART NO.	DESCRIPTION	FSCM	QTY
23	2A1A2A2MP1,MP2	1215-0095 4013	SPACER, LED, 3/8"(XD4,XD5)	17794 ZZZ	2
24-30			ITEM NUMBERS NOT USED		
31	2A1A2A2R1,R2	1179-0164-01 CCF-50-100kohm BCF-100kohm	RESISTOR, 100 KOHM,1/8W,5%(R1,R2)	17794 91637 62438	2
32	2A1A2A2R3,R4	1179-0168 CM45911	POTENTIOMETER, 5KOHM(R3,R4)	17794 12697	2
33	2A1A2A2R5	1179-0164-02 CCF-50-1Mohm BCF-1Mohm	RESISTOR, 1 MOHM, 1/8W,5%(R5)	17794 91637 62438	1
34-40			ITEM NUMBERS NOT USED		
41	2A1A2A2SW1,SW2	1157-0053 EP12-D1-C-B-E	SWITCH, MOMENTARY, SPDT(SW1,SW2)	17794 ZZZ	2
42	2A1A2A2SW3	1157-0054 ET01-S-D1-C-B-E	SWITCH, TOGGLE, SPDT(SW3)	17794 ZZZ	1
43-50			ITEM NUMBERS NOT USED		
51	2A1A2A2U1	1187-0059 ICL7107CPL TSC7107CPL	IC, ICL7107 A/D COVERTER(U1)	17794 34371 15818	1
52-60			ITEM NUMBERS NOT USED		
61	2A1A2A2W1	3008-0025	WIRE HARNESS, DISPLAY	17794	1
62	2A1A2A2XD1,XD2,XD3	1207-0178 ESS-107-TT/03	SOCKET, 7 PIN(XD1,XD2,XD3)	17794 55322	6
63	2A1A2A2XU1	1207-0177 2-641606-3 A-42000-4030	SOCKET, 40 PIN(XU1)	17794 09769 27264	1

BLANK

REVISIONS				
LEVEL	AUTHORIZATION	DES ENG APPR	W/S ENG APPR	MFG/QA APPROVAL
A	EC 3759			03/01/91

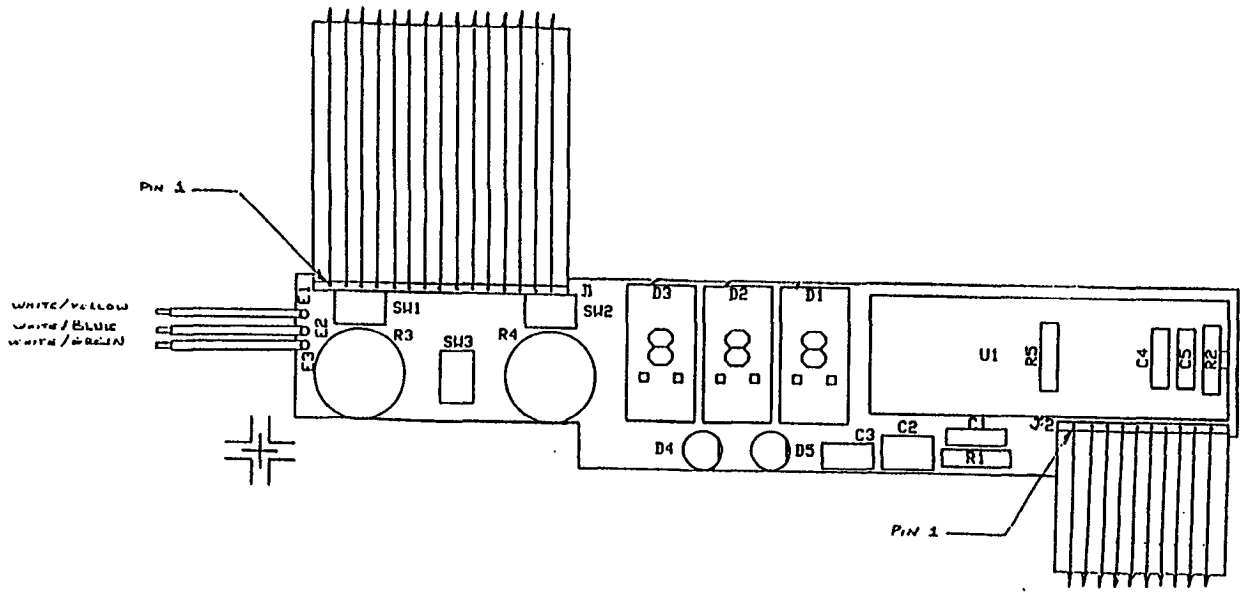

CAUTION

SENSITIVE ELECTRONIC DEVICES
DO NOT SHIP OR STORE NEAR STRONG
ELECTROSTATIC, ELECTROMAGNETIC,
MAGNETIC OR RADIOACTIVE FIELDS

The data in this proposal shall not be used or disclosed, except for evaluation purposes, provided that if a contract is awarded to this submitter as a result of or in connection with the submission of this proposal, the Government shall have the right to use or disclose the technical data to the extent provided in the contract. This restriction does not limit the Government's right to use or disclose any technical data which is not proprietary to the submitter or is obtained from another source without restriction.

PROPRIETARY ASSEMBLY DRAWING

THIS DRAWING CONTAINS INFORMATION PROPRIETARY TO PACE INC. ANY REPRODUCTION, DISCLOSURE OR USE OF THIS DRAWING IS EXPRESSLY PROHIBITED EXCEPT AS PACE INC. MAY OTHERWISE AGREE IN WRITING.

UNLESS OTHERWISE SPECIFIED DIMENSIONS ARE IN INCHES DO NOT SCALE

TOLERANCES		
2 PLACE	3 PLACE	ANGLES
± .01	± .005	± .5°

MATERIAL

FINISH

PACE

PCB ASSEMBLY
DISPLAY

FSCM NO	DWG NO
17794	R6020-0043

NLT SCALE — | SH | SHEET 1 OF 1

2A1A3A3 6020-0043

PACE INCORPORATED

PROPRIETARY PARTS LIST

The data in this proposal shall not be used or disclosed, except for evaluation purposes, provided that if a contract is awarded to this submitter as a result of or in connection with the submission of this proposal, the Government shall have the right to use or disclose this technical data to the extent provided in the contract. This restriction does not limit the Government's right to use or disclose any technical data which is not proprietary to the submitter or is obtained from another source without restriction.

DWG. NO: R3008-0025 REV: A EC NO: 3759 DATE: 3/4/94 APP:

AMENDED P/L FORMAT: 8/23/94

TITLE: WIRE HARNESS, DISPLAY, HOT SPOT

INDEX	REFERENCE NO.	PART NO.	DESCRIPTION	FSCM	QTY
REF	2A1A2A2W1	3008-0025	WIRE HARNESS, DISPLAY, HOT SPOT	17794	REF

DWG NO. A R3008 - 0025 A

REVISIONS				
LEVEL	AUTHORIZATION	DES. ENG. INITIAL	MFG. ENG. INITIAL	RELEASE APPROVAL INITIAL/DATE
A	EC 3759	C.CARDNO	M.PANT	3/4/94

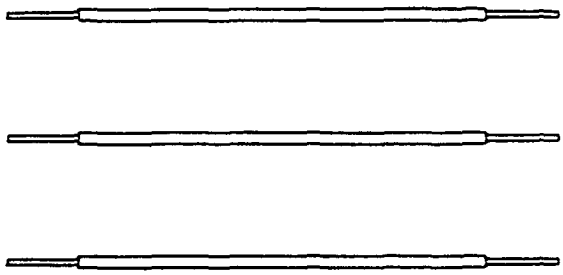

The data in this proposal shall not be used or disclosed, except for evaluation purposes, provided that if a contract is awarded to this submitter as a result of or in connection with the submission of this proposal, the Government shall have the right to use or disclose this technical data to the extent provided in the contract. This restriction does not limit the Government's right to use or disclose any technical data which is not proprietary to the submitter or is obtained from another source without restriction.

PROPRIETARY SOURCE CONTROL DRAWING

THIS DRAWING CONTAINS INFORMATION PROPRIETARY TO PACE INC.. ANY REPRODUCTION, DISCLOSURE OR USE OF THIS DRAWING IS EXPRESSLY PROHIBITED EXCEPT AS PACE INC. MAY OTHERWISE AGREE IN WRITING.

PACE®
PACE, Incorporated
9693 Brewers Court
Laurel, MD 20723, U.S.A.
TEL (301) 490-9660 FAX (301) 604-2160
Systems for Development, Production, and Repair of Electronic Assemblies

UNLESS OTHERWISE SPECIFIED DIMENSIONS ARE IN INCHES. DO NOT SCALE.

TOLERANCES		
2 PLACE	3 PLACE	ANGLES
± .01	± .005	± .5°

MATERIAL

FINISH

WIRE HARNESS
MAIN, HOT SPOT

F.S.C.M. NO.	DWG. NO.
17794	R3008–0025

REF. SCALE 1/1 | SK | SHEET 1 OF 1

CAD 1 INC. 301-565-3340 567825

2A1A2A2W1 3008-0025

PAGE® INCORPORATED

PROPRIETARY PARTS LIST

The data in this proposal shall not be used or disclosed, except for evaluation purposes, provided that if a contract is awarded to this submitter as a result of or in connection with the submission of this proposal, the Government shall have the right to use or disclose this technical data to the extent provided in the contract. This restriction does not limit the Government's right to use or disclose any technical data which is not proprietary to the submitter or is obtained from another source without restriction.

DWG. NO: R3008-0014 REV: A EC NO: 3759 DATE: 3/4/94 APP:

AMENDED P/L FORMAT: 8/23/94

TITLE: WIRE HARNESS, HOT SPOT

INDEX	REFERENCE NO.	PART NO.	DESCRIPTION	FSCM	QTY
REF	2A1W1	3008-0014	WIRE HARNESS, HOT SPOT	17794	REF

DWG NO.
B

REVISIONS				
LEVEL	AUTHORIZATION	DES. ENG. INITIAL	MFG. ENG. INITIAL	RELEASE APPROVAL INITIAL/DATE
A	EC 3759	C. CARDHO	M. PANT	3/4/94

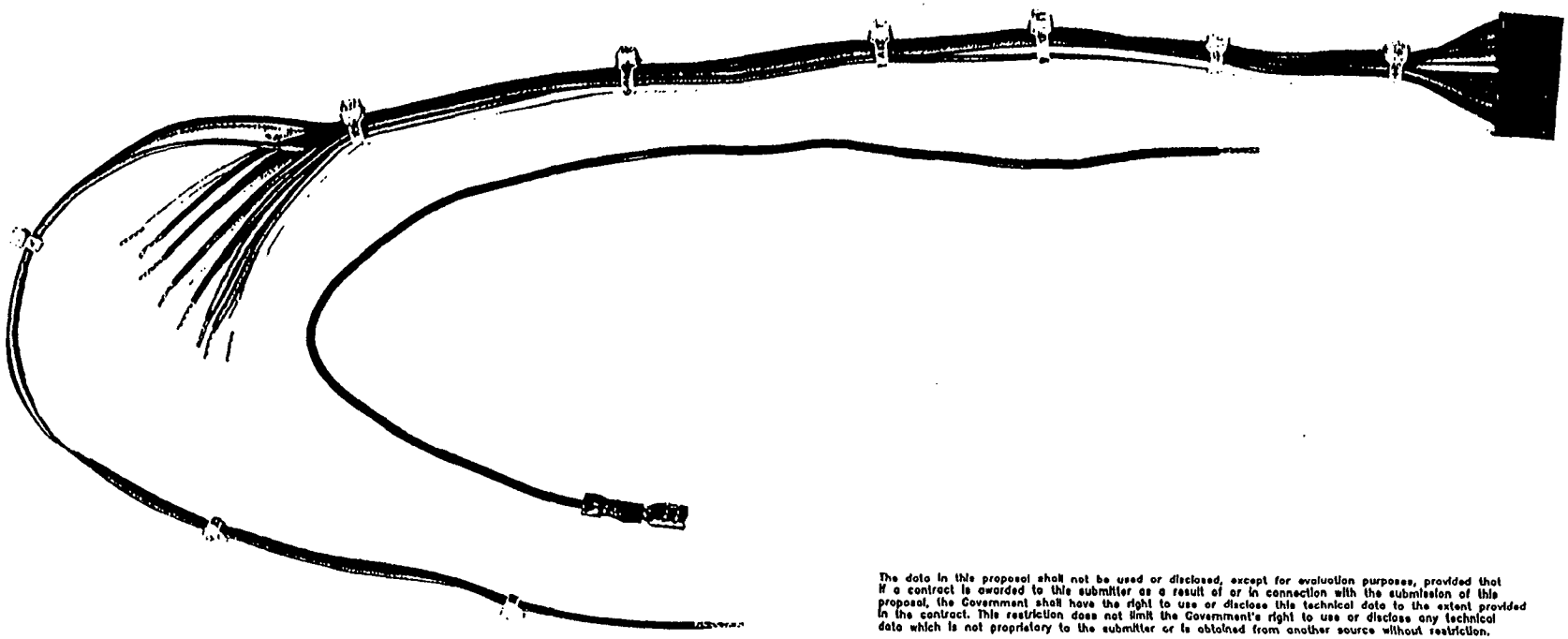

The data in this proposal shall not be used or disclosed, except for evaluation purposes, provided that if a contract is awarded to this submitter as a result of or in connection with the submission of this proposal, the Government shall have the right to use or disclose this technical data to the extent provided in the contract. This restriction does not limit the Government's right to use or disclose any technical data which is not proprietary to the submitter or is obtained from another source without restriction.

PROPRIETARY SOURCE CONTROL DRAWING

THIS DRAWING CONTAINS INFORMATION PROPRIETARY TO PACE INC.. ANY REPRODUCTION, DISCLOSURE OR USE OF THIS DRAWING IS EXPRESSLY PROHIBITED EXCEPT AS PACE INC. MAY OTHERWISE AGREE IN WRITING.

PACE®
PACE, Incorporated
8693 Stevens Court
Laurel, MD 20723, U.S.A.
TEL (301) 490-9660 FAX (301) 604-2180
Systems for Development, Production, and Repair of Electronic Assemblies

UNLESS OTHERWISE SPECIFIED DIMENSIONS ARE IN INCHES. DO NOT SCALE.

TOLERANCES		
2 PLACE	3 PLACE	ANGLES
± .01	± .005	± .5°

MATERIAL
–

FINISH
–

WIRE HARNESS
HOT SPOT

F.S.C.M. NO. 17794

DWG. NO. R3008-0014

REF. SCALE – SK – SHEET 1 OF 1

2A1W1 3008-0014

CAD 1 INC. 301-565-3340 567825

PACE® INCORPORATED

PROPRIETARY PARTS LIST

The data in this proposal shall not be used or disclosed, except for evaluation purposes, provided that if a contract is awarded to this submitter as a result of or in connection with the submission of this proposal, the Government shall have the right to use or disclose this technical data to the extent provided in the contract. This restriction does not limit the Government's right to use or disclose any technical data which is not proprietary to the submitter or is obtained from another source without restriction.

DWG. NO: R6040-0002 REV: A EC NO: 3759 DATE: 3/4/94 APP: m

AMENDED P/L FORMAT: 8/23/94

TITLE: ASSY, CLAMP ARM

INDEX	REFERENCE NO.	PART NO.	DESCRIPTION	FSCM	QTY
REF	2A2	6040-0002	ASSY, CLAMP ARM	17794	REF
1	2A2MP1	1222-0044 DK-40	KNOB, BLACK	17794 01599	1

DWG NO.
B

REVISIONS				
LEVEL	AUTHORIZATION	DES. ENG. INITIAL	MFG. ENG. INITIAL	RELEASE APPROVAL INITIAL/DATE
A	EC 3759	C. CARDNO	M. PANT	3/4/94

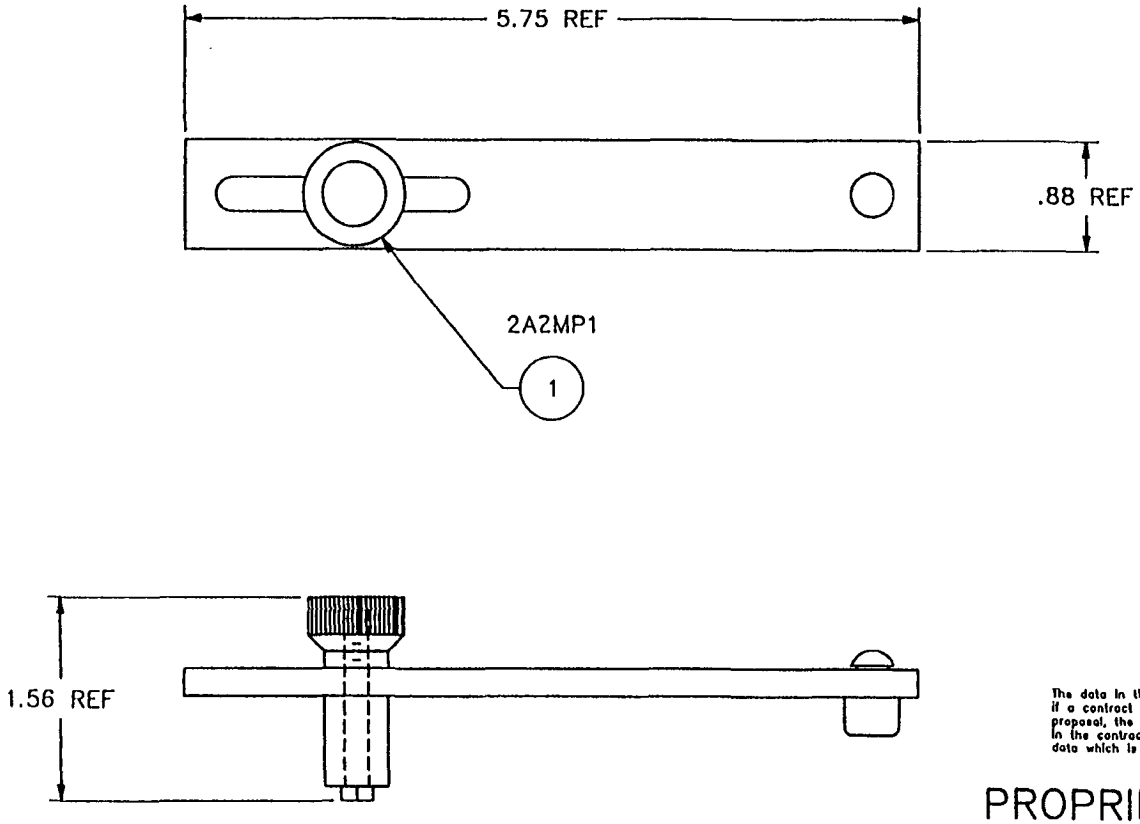

The data in this proposal shall not be used or disclosed, except for evaluation purposes, provided that if a contract is awarded to this submitter as a result of or in connection with the submission of this proposal, the Government shall have the right to use or disclose this technical data to the extent provided in the contract. This restriction does not limit the Government's right to use or disclose any technical data which is not proprietary to the submitter or is obtained from another source without restriction.

PROPRIETARY ASSEMBLY DRAWING

THIS DRAWING CONTAINS INFORMATION PROPRIETARY TO PACE INC.. ANY REPRODUCTION, DISCLOSURE OR USE OF THIS DRAWING IS EXPRESSLY PROHIBITED EXCEPT AS PACE INC. MAY OTHERWISE AGREE IN WRITING.

PACE(®) PACE, Incorporated
8863 Brewers Court
Laurel, MD 20723, U.S.A.
TEL (301) 490 9860 FAX (301) 604-2160
Systems for Development, Production, and Repair of Electronic Assemblies

UNLESS OTHERWISE SPECIFIED DIMENSIONS ARE IN INCHES. DO NOT SCALE.

TOLERANCES		
2 PLACE	3 PLACE	ANGLES
± .01	± .005	± .5°

MATERIAL: NONE

FINISH: NONE

CLAMP, ARM ASSEMBLY

F.S.C.M. NO.	DWG. NO.
17794	R6040-0002

REF. SCALE 1/1 | SK – | SHEET 1 OF 1

CAD 1 INC. 301-565-3340 567825

2A2 6040-0002

PACE® INCORPORATED

PROPRIETARY PARTS LIST

The data in this proposal shall not be used or disclosed, except for evaluation purposes, provided that if a contract is awarded to this submitter as a result of or in connection with the submission of this proposal, the Government shall have the right to use or disclose this technical data to the extent provided in the contract. This restriction does not limit the Government's right to use or disclose any technical data which is not proprietary to the submitter or is obtained from another source without restriction.

DWG. NO: R6993-0102 REV: A EC NO: 3759 DATE: 3/4/94 APP:

AMENDED P/L FORMAT: 8/23/94

TITLE: ASSY, THERMAL SELECTIVITY

INDEX	REFERENCE NO.	PART NO.	DESCRIPTION	FSCM	QTY
REF	2A3	6993-0102	ASSY, THERMAL SELECTIVITY	17794	REF
1	2A3MP1	1317-0018	PAD, ADHESIVE BACKED, 4" X 6"	17794	2

DWG NO.
B

REVISIONS				
LEVEL	AUTHORIZATION	DES. ENG. INITIAL	MFG. ENG. INITIAL	RELEASE APPROVAL INITIAL/DATE
A	EC 3759	C. CARDNO	M. PANT	3/4/84

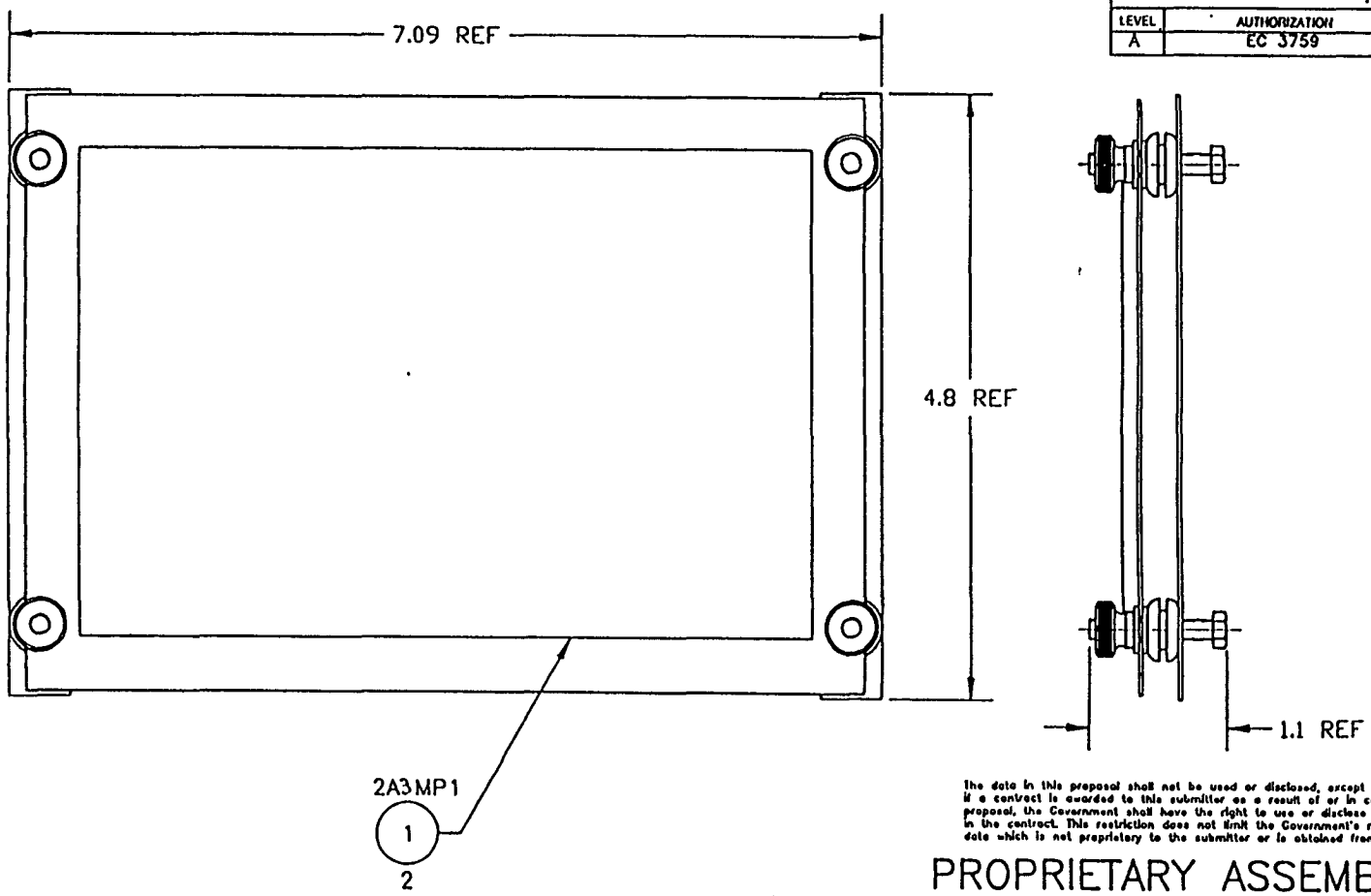

The data in this proposal shall not be used or disclosed, except for evaluation purposes, provided that if a contract is awarded to this submitter as a result of or in connection with the submission of this proposal, the Government shall have the right to use or disclose this technical data to the extent provided in the contract. This restriction does not limit the Government's right to use or disclose any technical data which is not proprietary to the submitter or is obtained from another source without restriction.

PROPRIETARY ASSEMBLY DRAWING

THIS DRAWING CONTAINS INFORMATION PROPRIETARY TO PACE INC.. ANY REPRODUCTION, DISCLOSURE OR USE OF THIS DRAWING IS EXPRESSLY PROHIBITED EXCEPT AS PACE INC. MAY OTHERWISE AGREE IN WRITING.

PACE
PACE, Incorporated
9800 Brewers Court
Laurel, MD 20723, U.S.A.
TEL (301) 490-9000 FAX (301) 604-2188
Systems for Development, Production, and Repair of Electronic Assemblies

UNLESS OTHERWISE SPECIFIED DIMENSIONS ARE IN INCHES. DO NOT SCALE.

TOLERANCES		
2 PLACE	3 PLACE	ANGLES
± .01	± .005	± .5°

MATERIAL: NONE

FINISH: NONE

THERMAL SELECTIVITY ASSEMBLY

F.S.C.M. NO.	DWG. NO.
17794	R6993-0102

REF. SCALE 1/1 | SK – | SHEET 1 OF 1

2A3 6993-0102

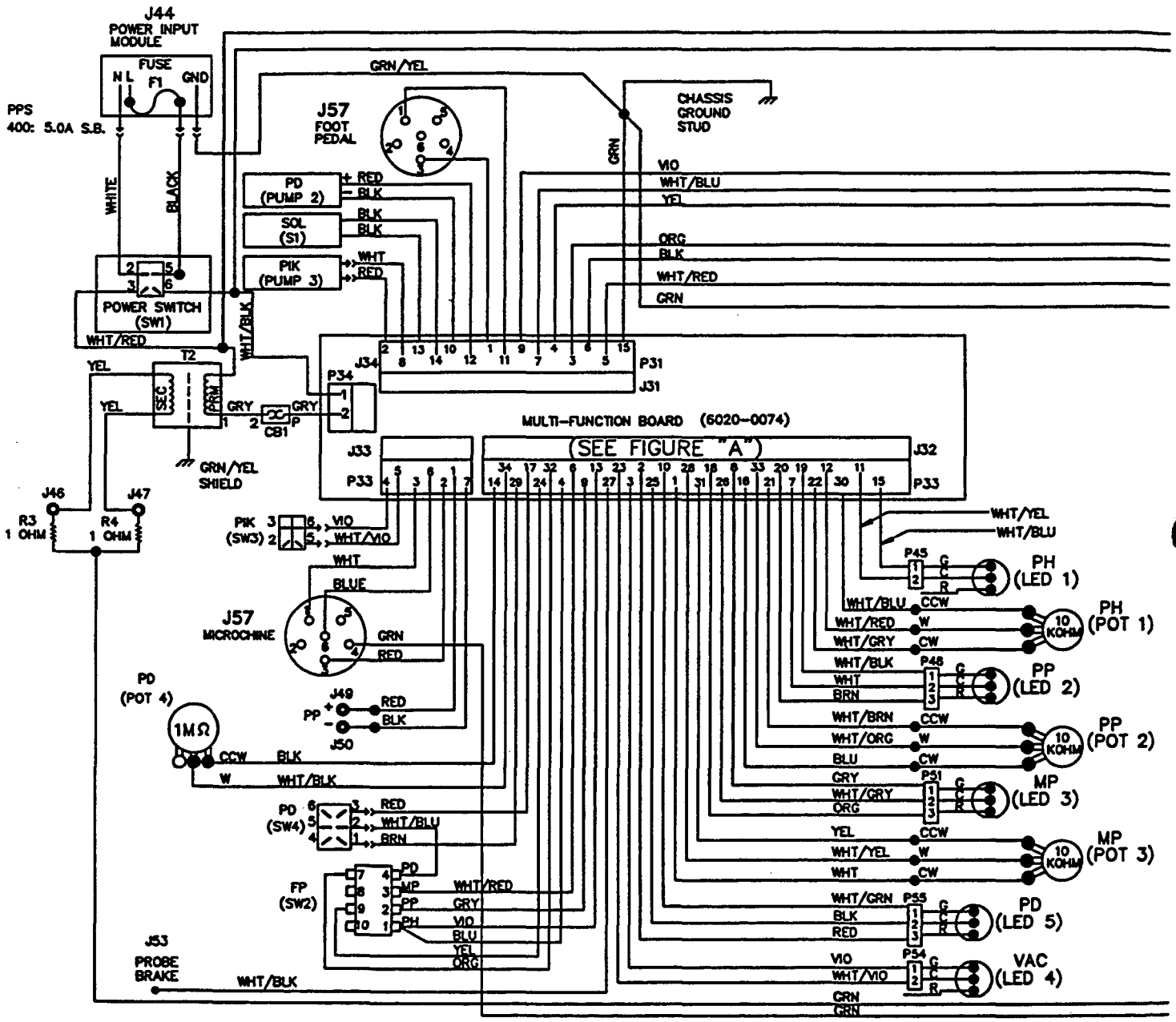

PRC 2000 Wiring Diagram Page 1

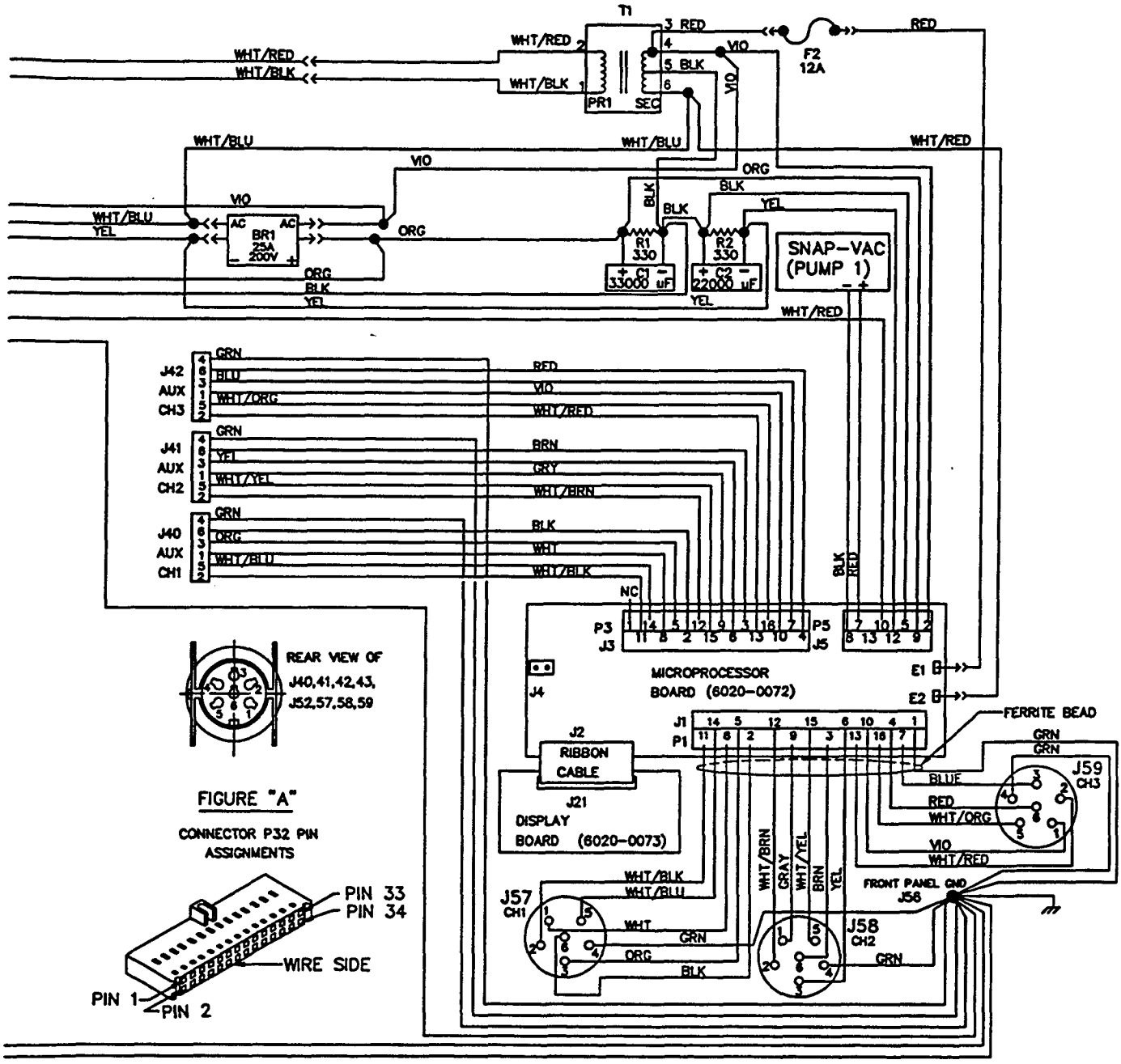

PRC 2000 Wiring Diagram Page 2

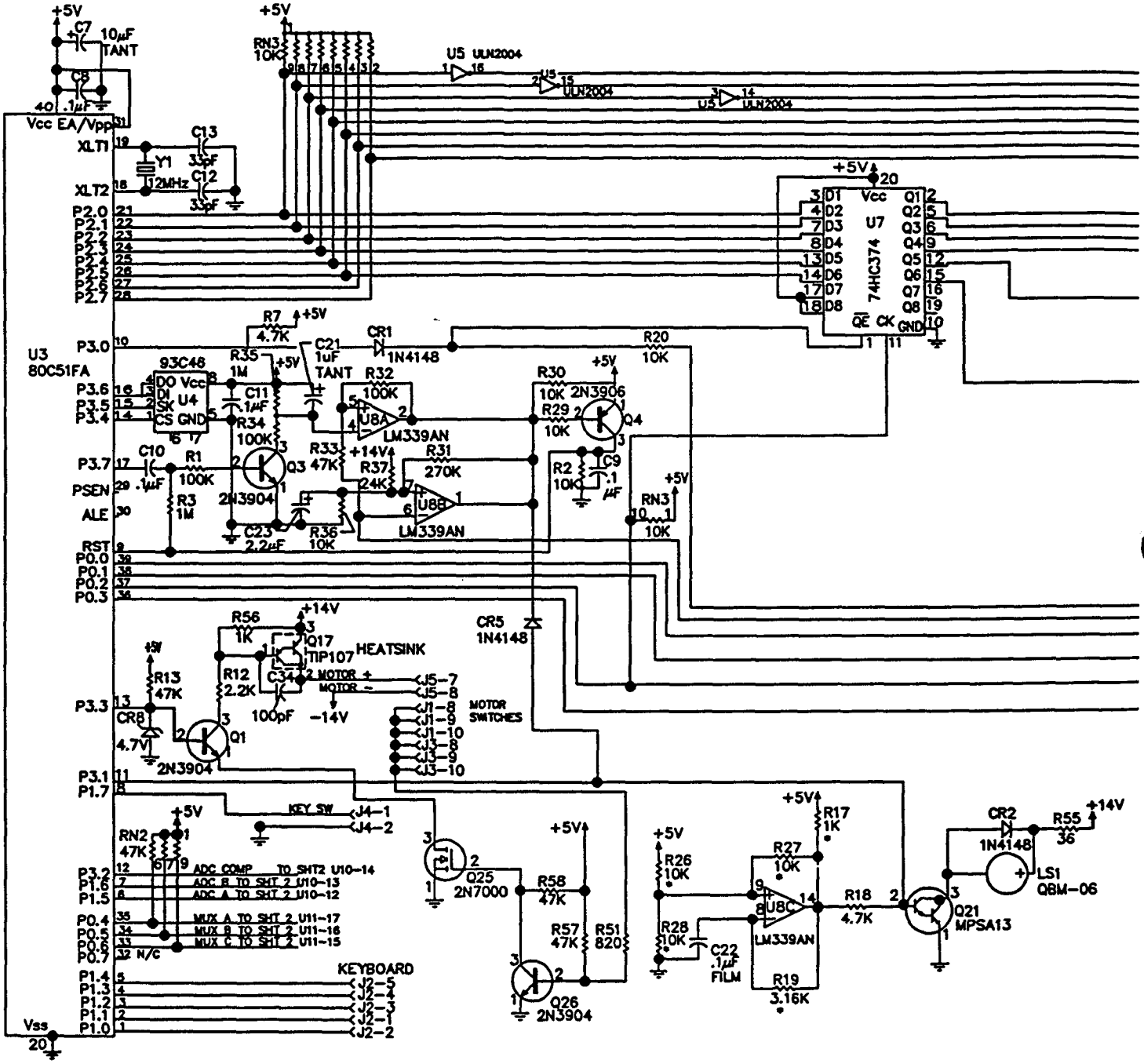

PRC 2000 Microprocessor Schematic, Sheet 1 of 2, Page 1

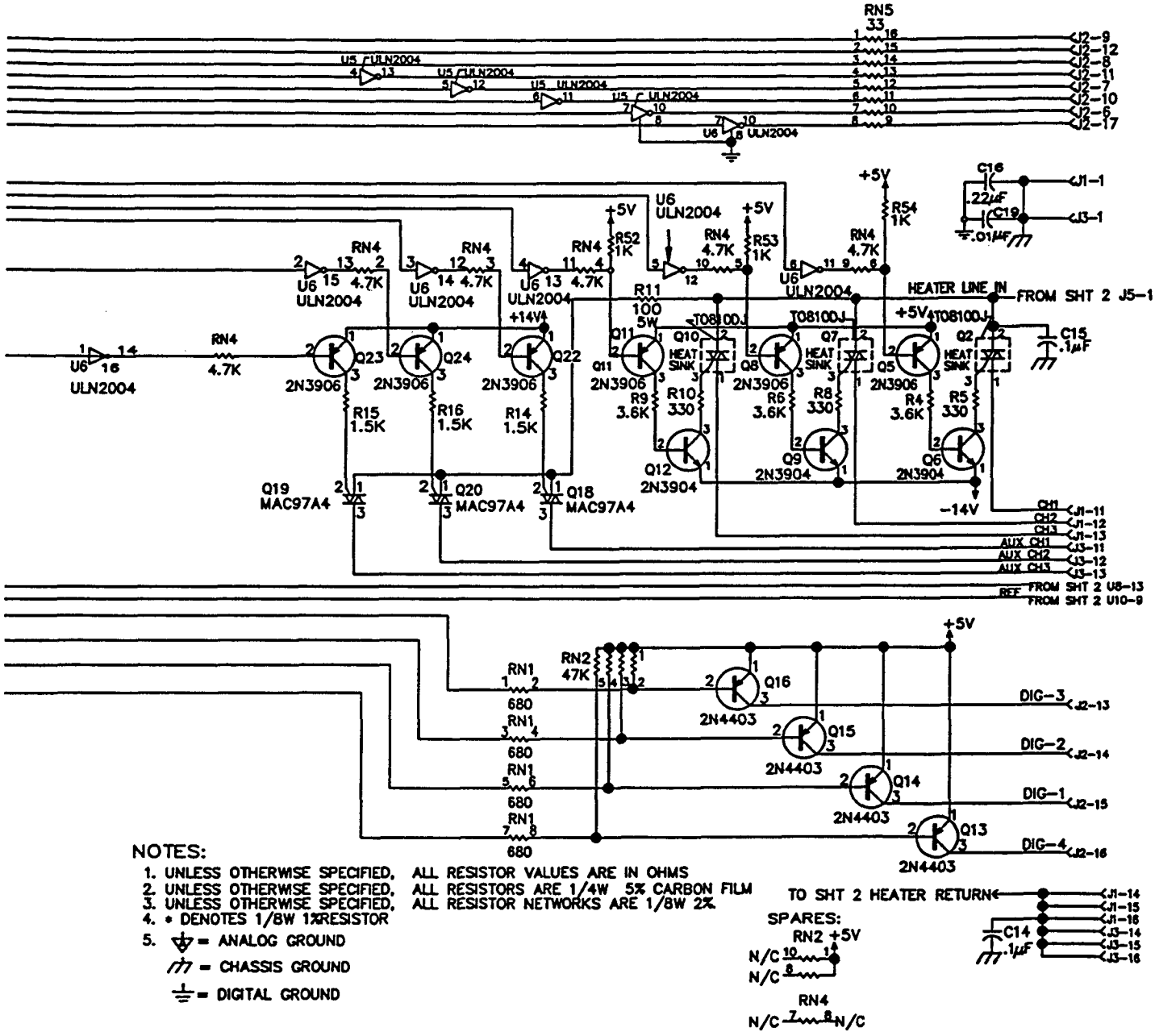

NOTES:

1. UNLESS OTHERWISE SPECIFIED, ALL RESISTOR VALUES ARE IN OHMS
2. UNLESS OTHERWISE SPECIFIED, ALL RESISTORS ARE 1/4W 5% CARBON FILM
3. UNLESS OTHERWISE SPECIFIED, ALL RESISTOR NETWORKS ARE 1/8W 2%
4. * DENOTES 1/8W 1% RESISTOR
5. = ANALOG GROUND
   = CHASSIS GROUND
   = DIGITAL GROUND

PRC 2000 Microprocessor Schematic, Sheet 1 of 2, Page 2

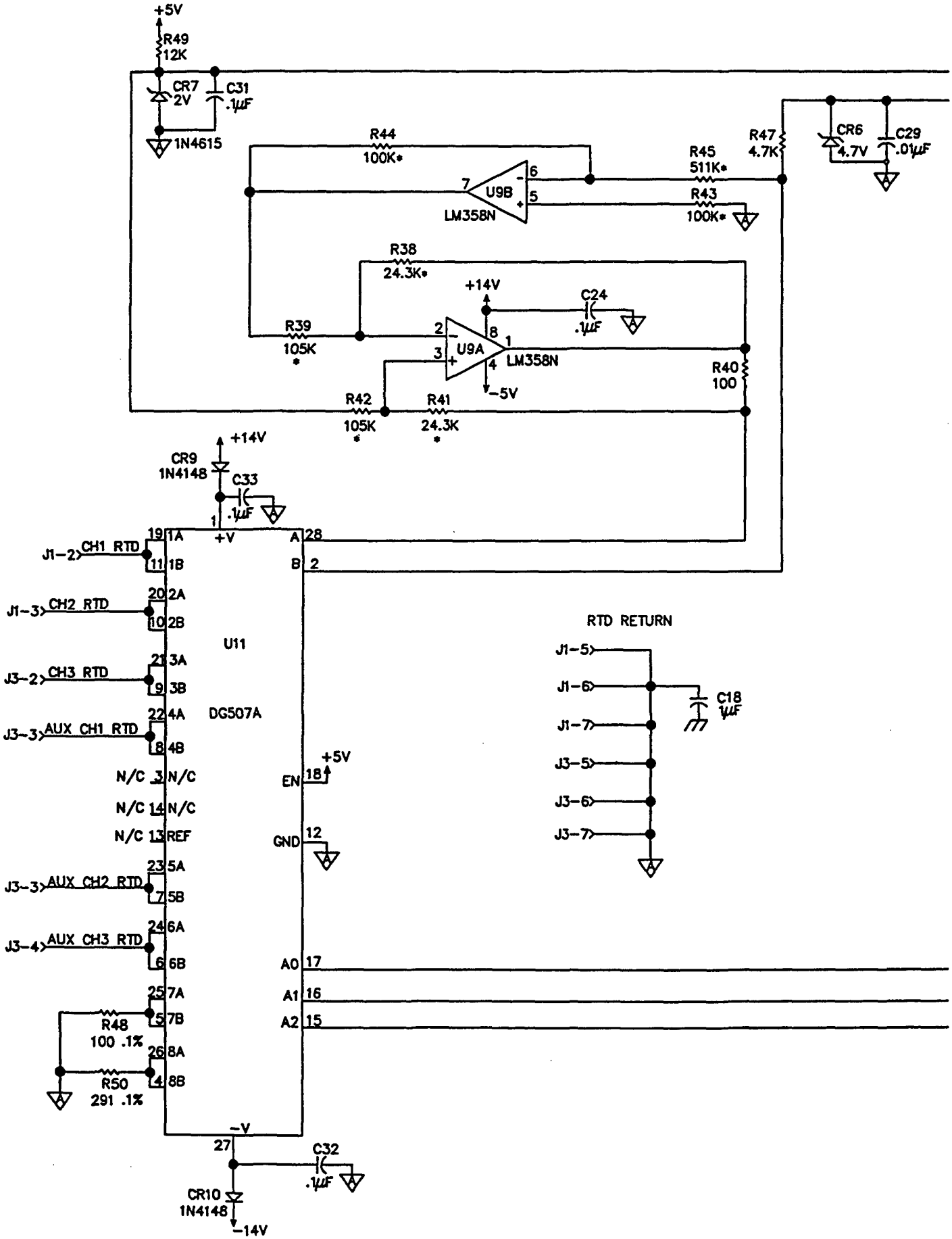

PRC 2000 Microprocessor Schematic, Sheet 2 of 2, Page 1

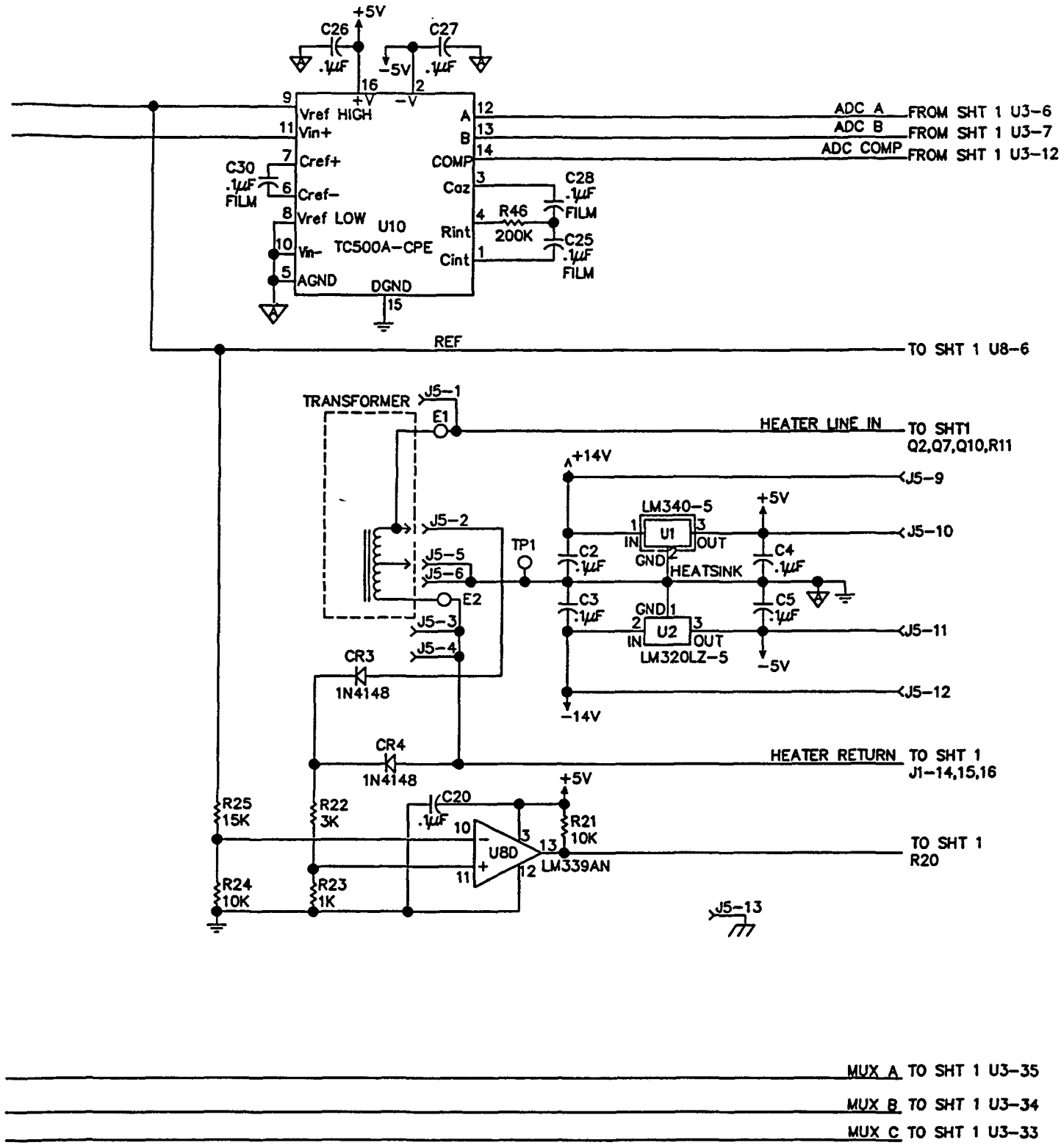

PRC 2000 Microprocessor Schematic, Sheet 2 of 2, Page 2

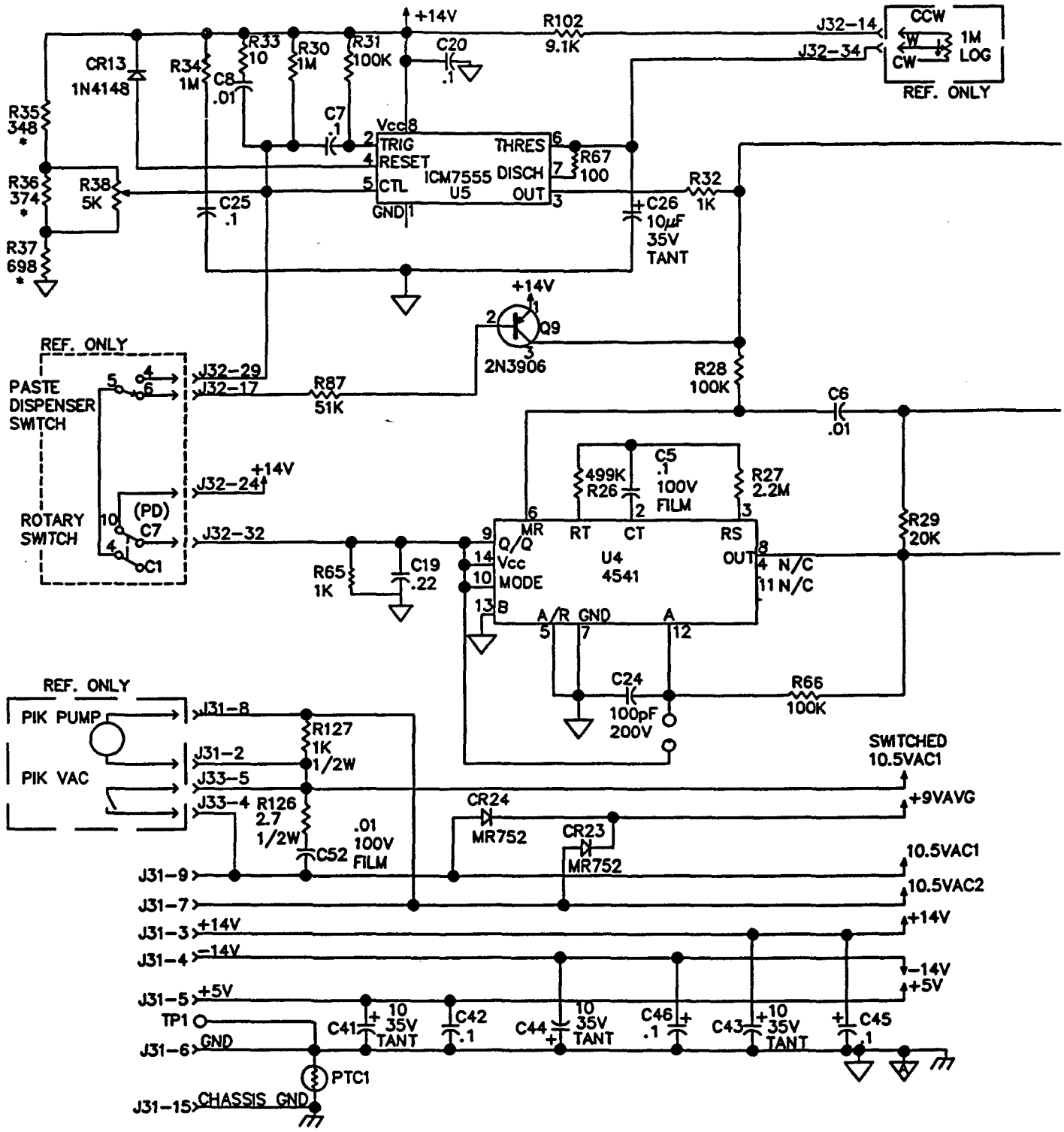

PRC 2000 Multifunction Schematic, Sheet 1 of 3, Page 1

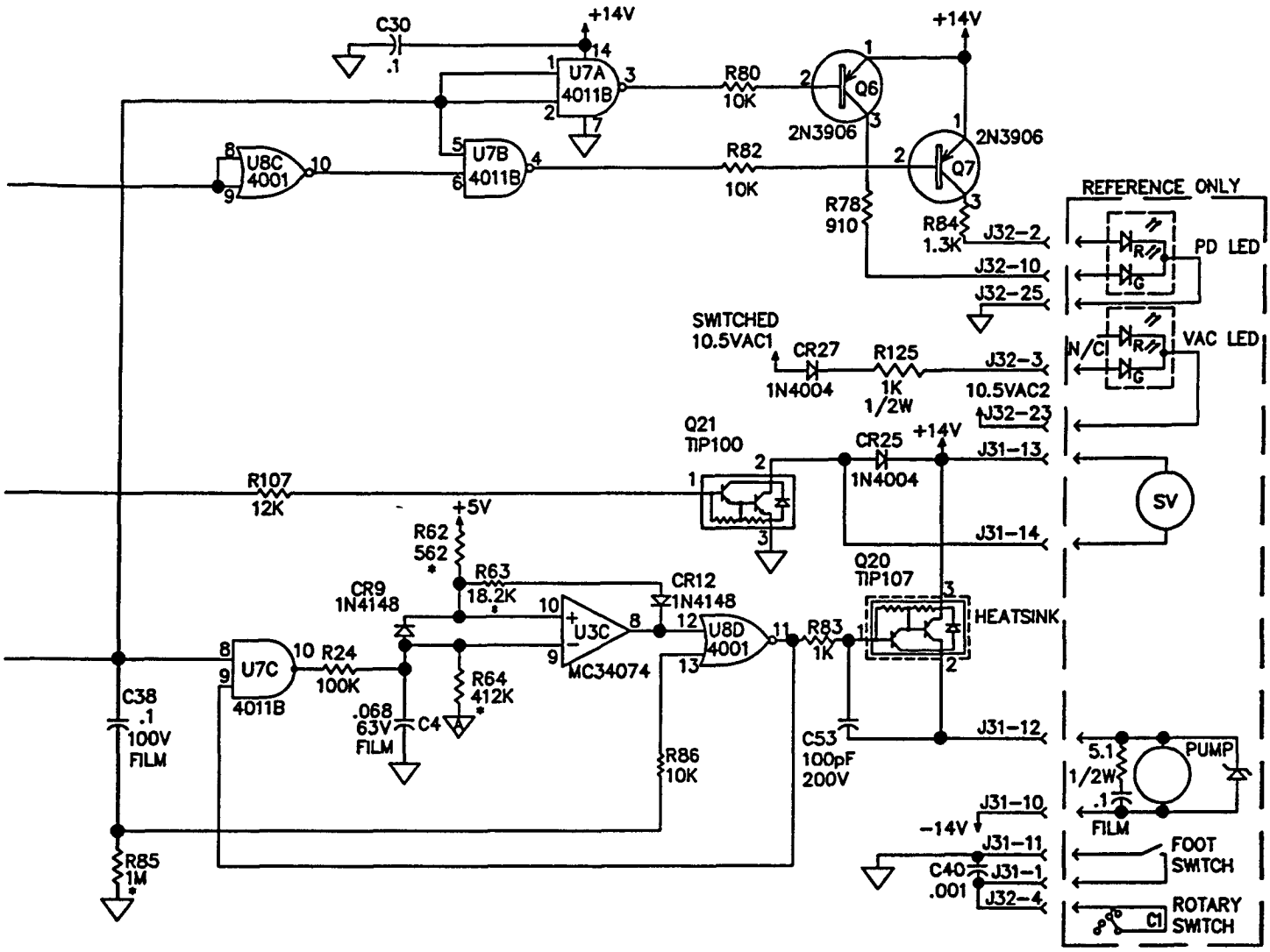

LAST USED	NOT USED
C53	
CR27	
J34	J1-J30
MOV1	
Q25	
R128	
TP1	
U10	

NOTES:

1. UNLESS OTHERWISE SPECIFIED, ALL RESISTOR VALUES ARE IN OHMS
2. UNLESS OTHERWISE SPECIFIED, ALL RESISTORS ARE 1/4W 5% CARBON FILM
3. * DENOTES 1/8W 1% METAL FILM RESISTOR.
4. UNLESS OTHERWISE SPECIFIED, ALL CAPACITOR VALUES ARE IN MICROFARADS.
5. UNLESS OTHERWISE SPECIFIED, ALL CAPACITORS ARE CERAMIC, 50V MIN.

PRC 2000 Multifunction Schematic, Sheet 1 of 3, Page 2

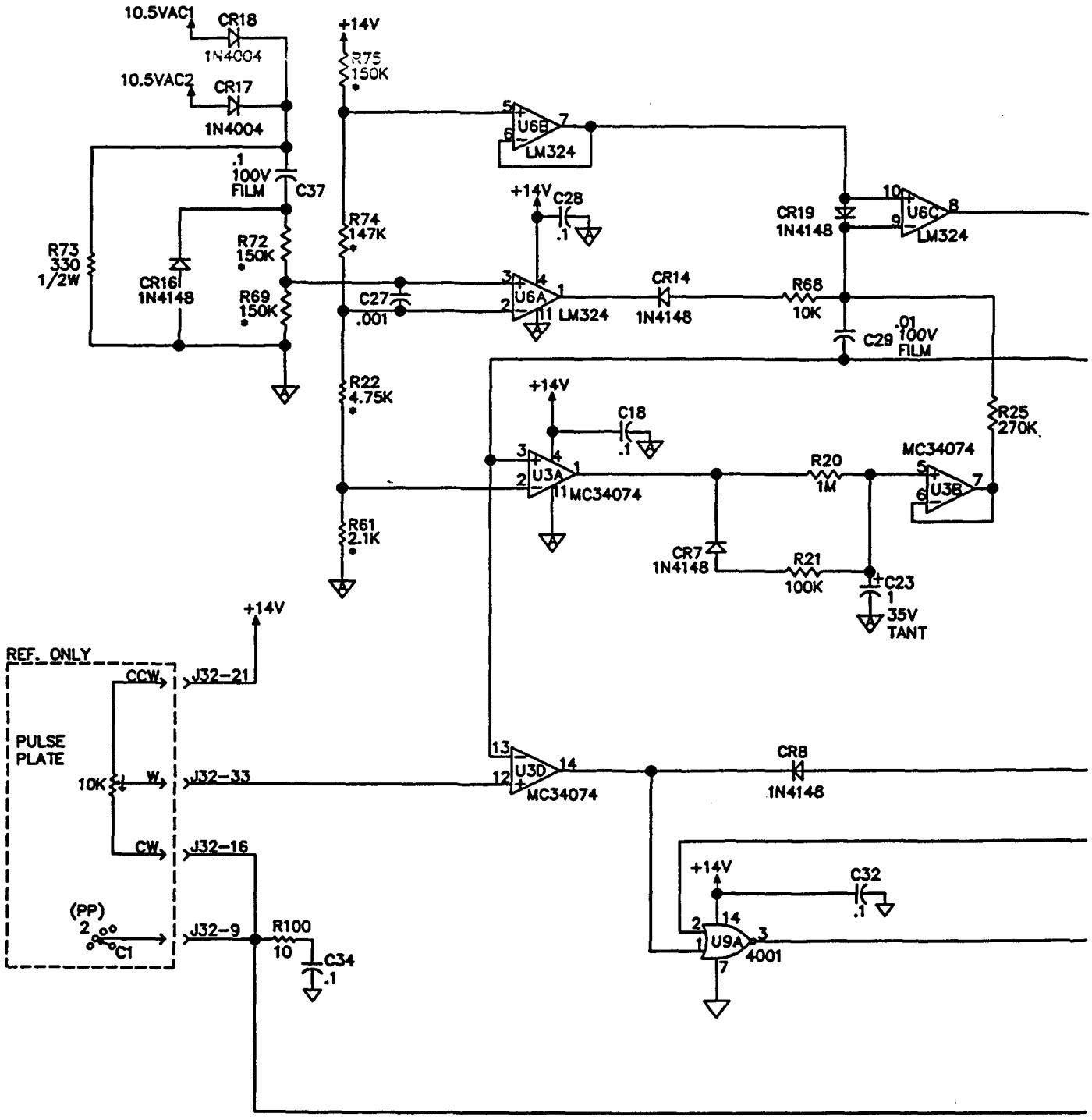

PRC 2000 Multifunction Schematic, Sheet 2 of 3, Page 1

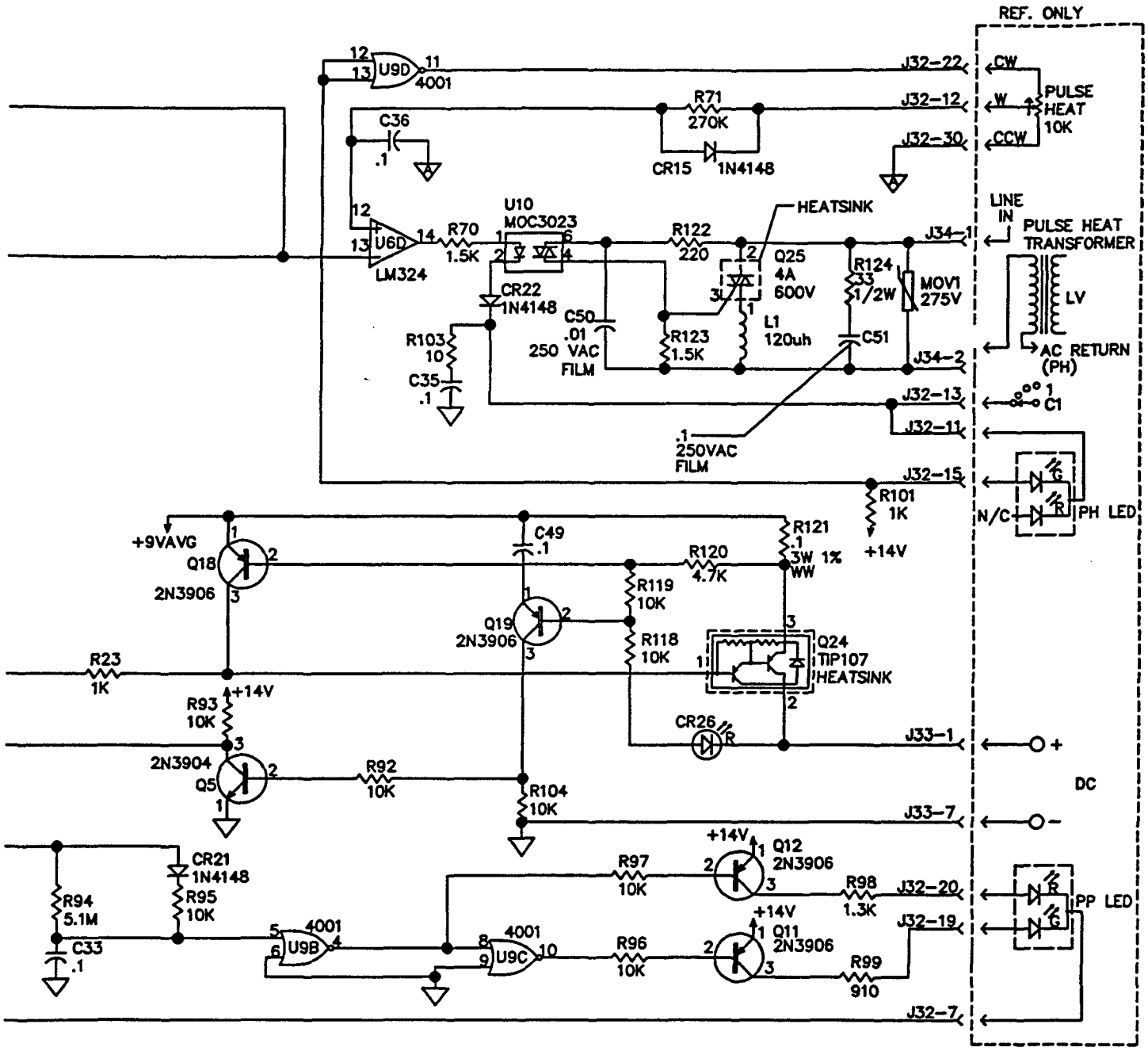

PRC 2000 Multifunction Schematic, Sheet 2 of 3, Page 2

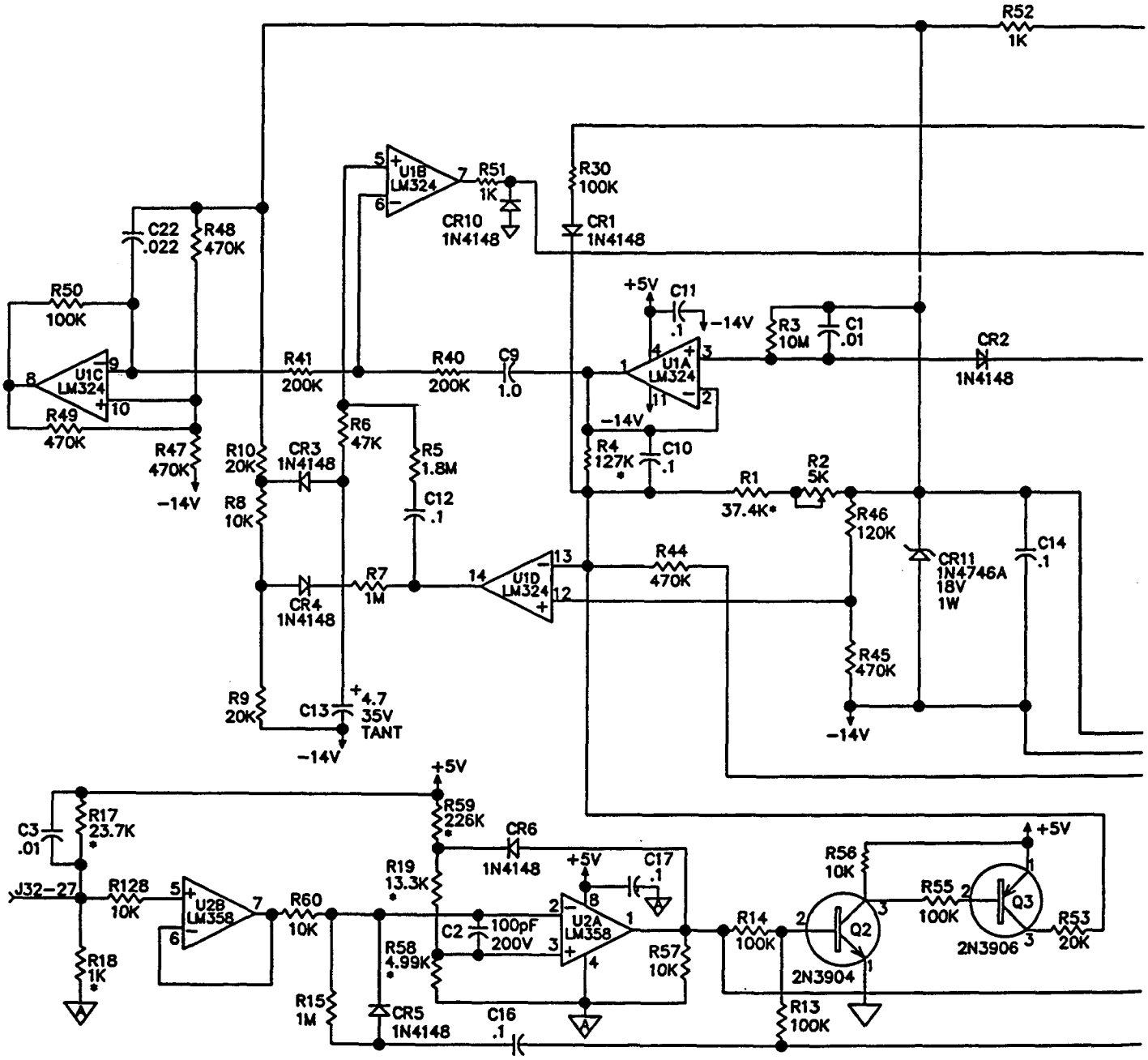

PRC 2000 Multifunction Schematic, Sheet 3 of 3, Page 1

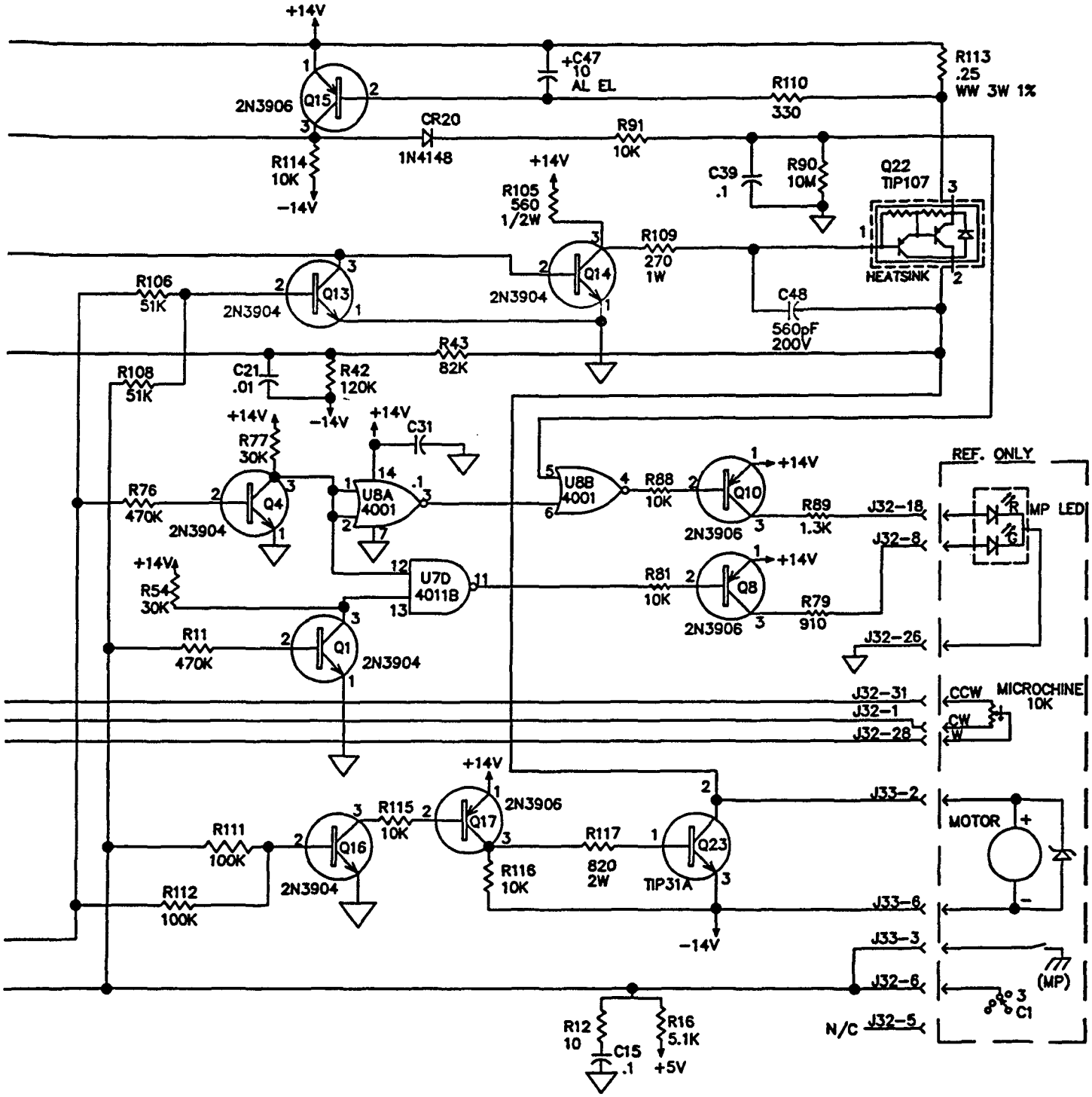

PRC 2000 Multifunction Schematic, Sheet 3 of 3, Page 2

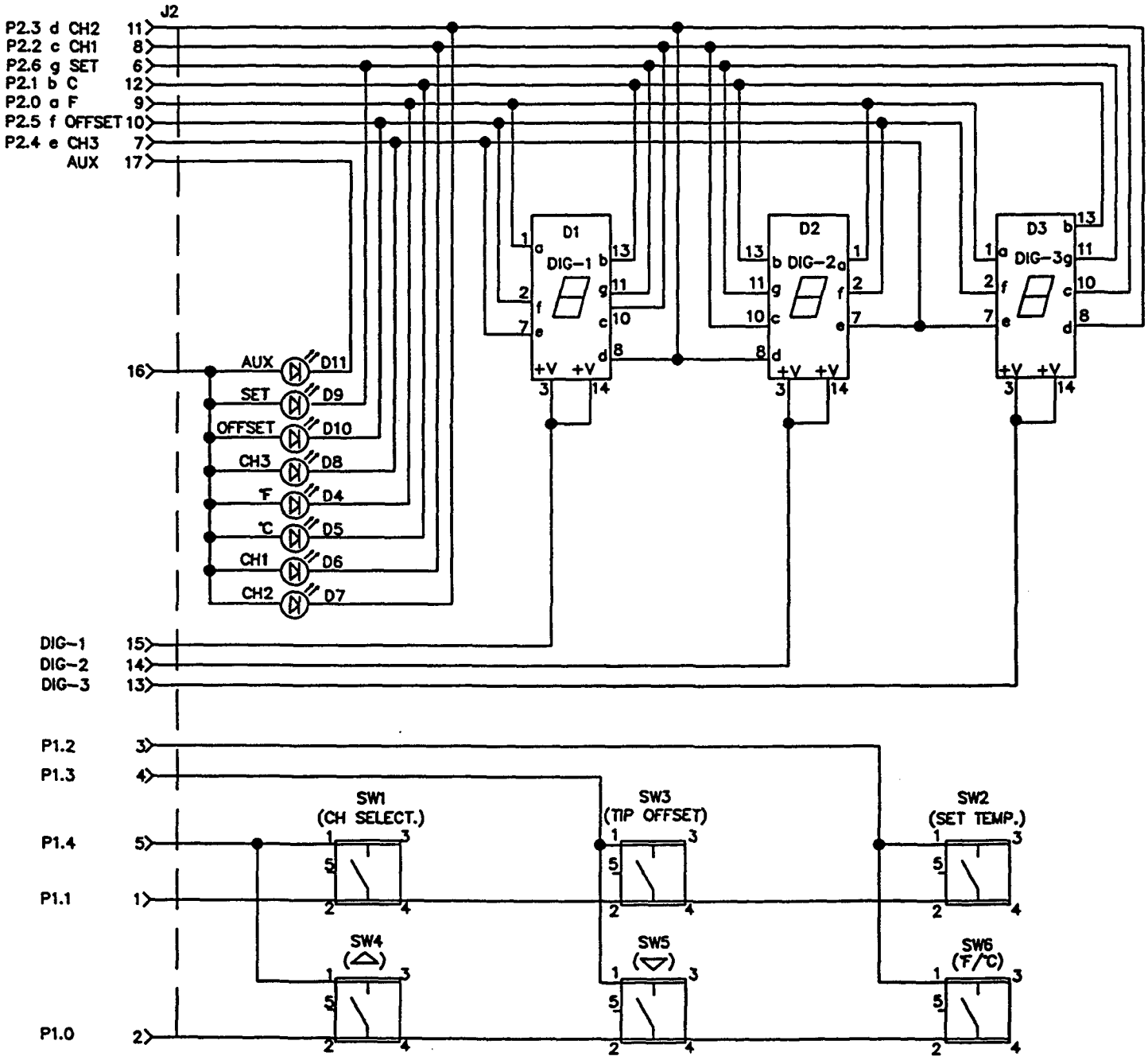

PRC 2000 Display Board Schematic

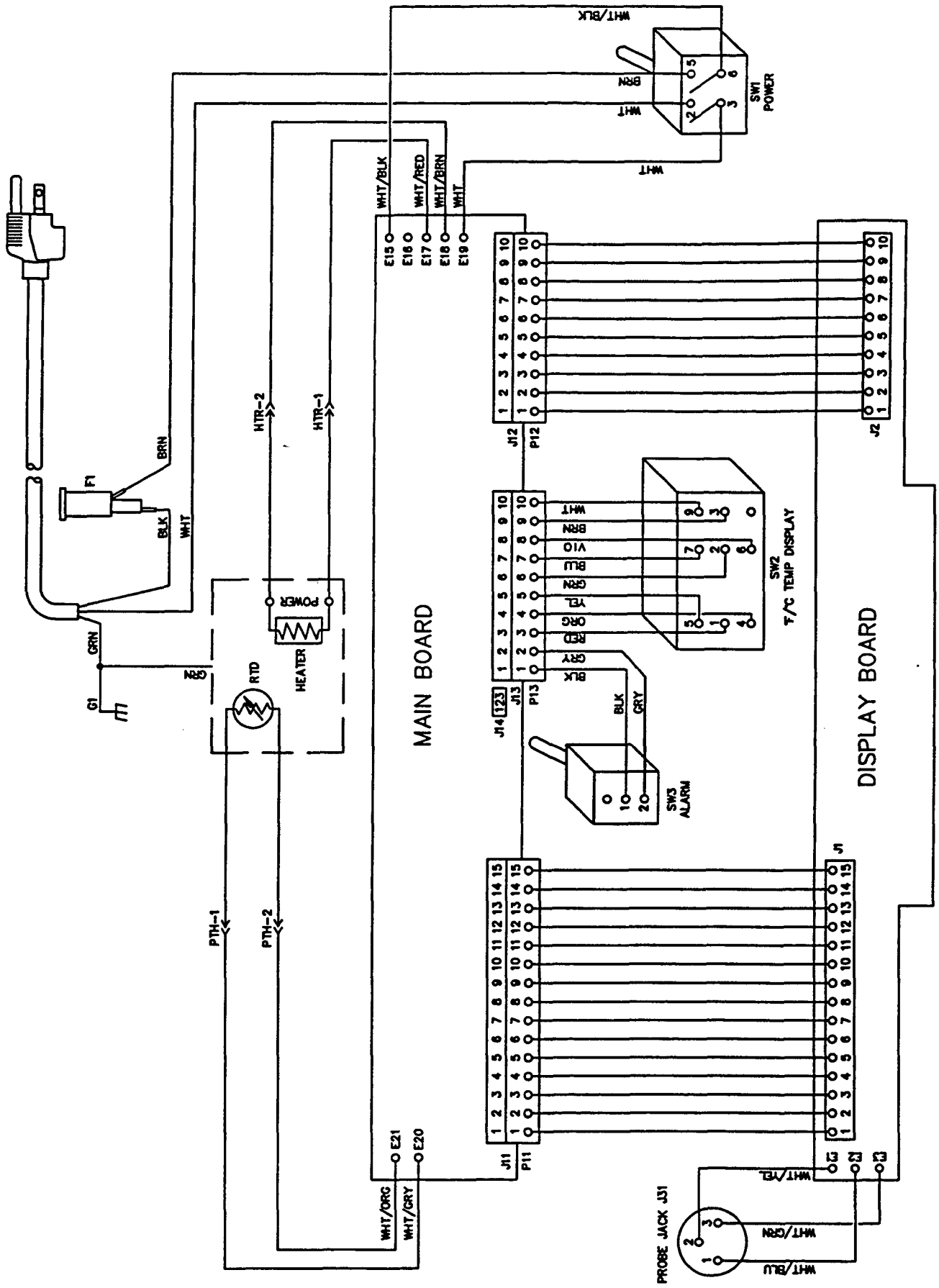

HS 150 Wiring Diagram

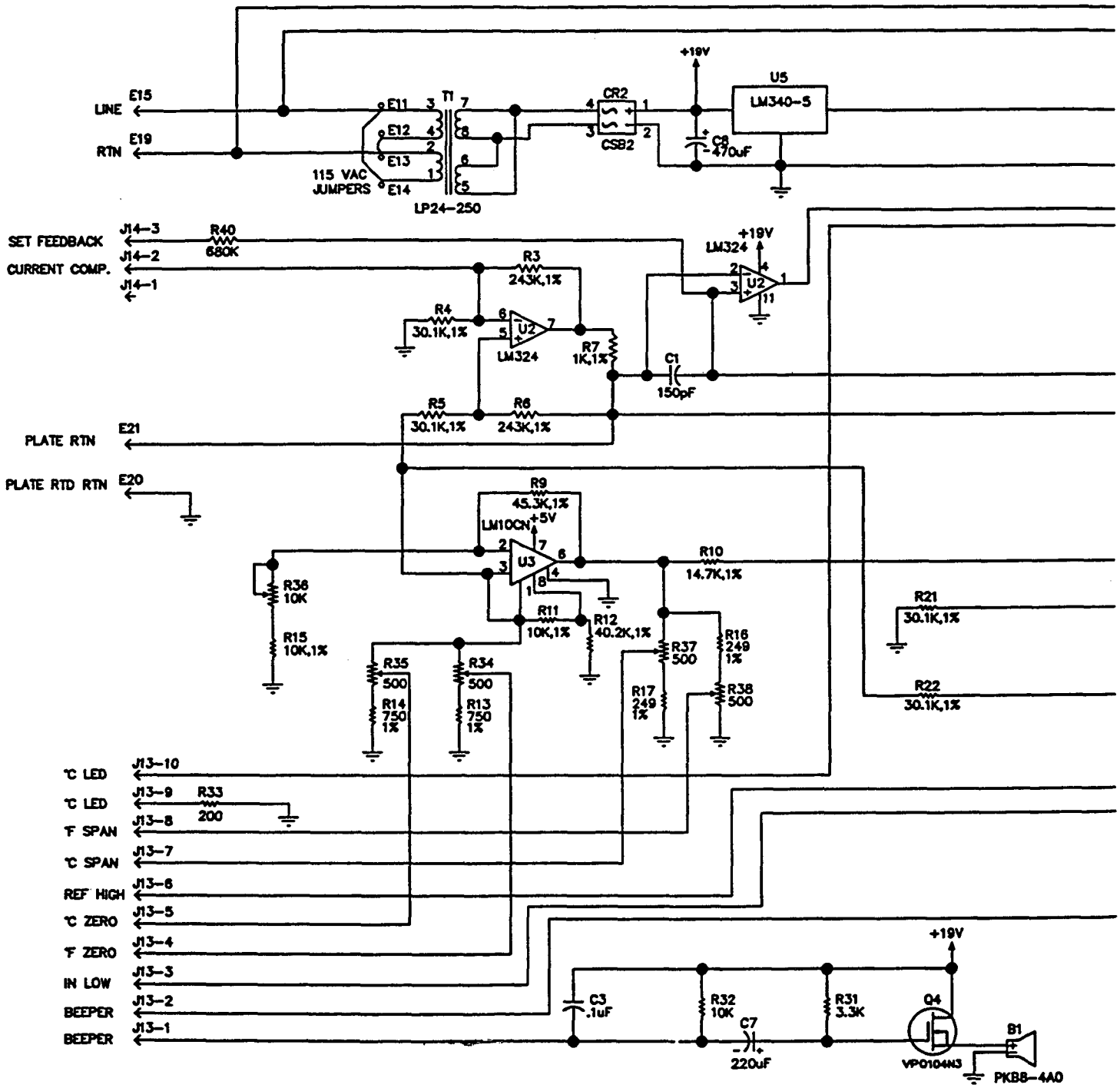

HS 150 Main Board , Page 1 of 2

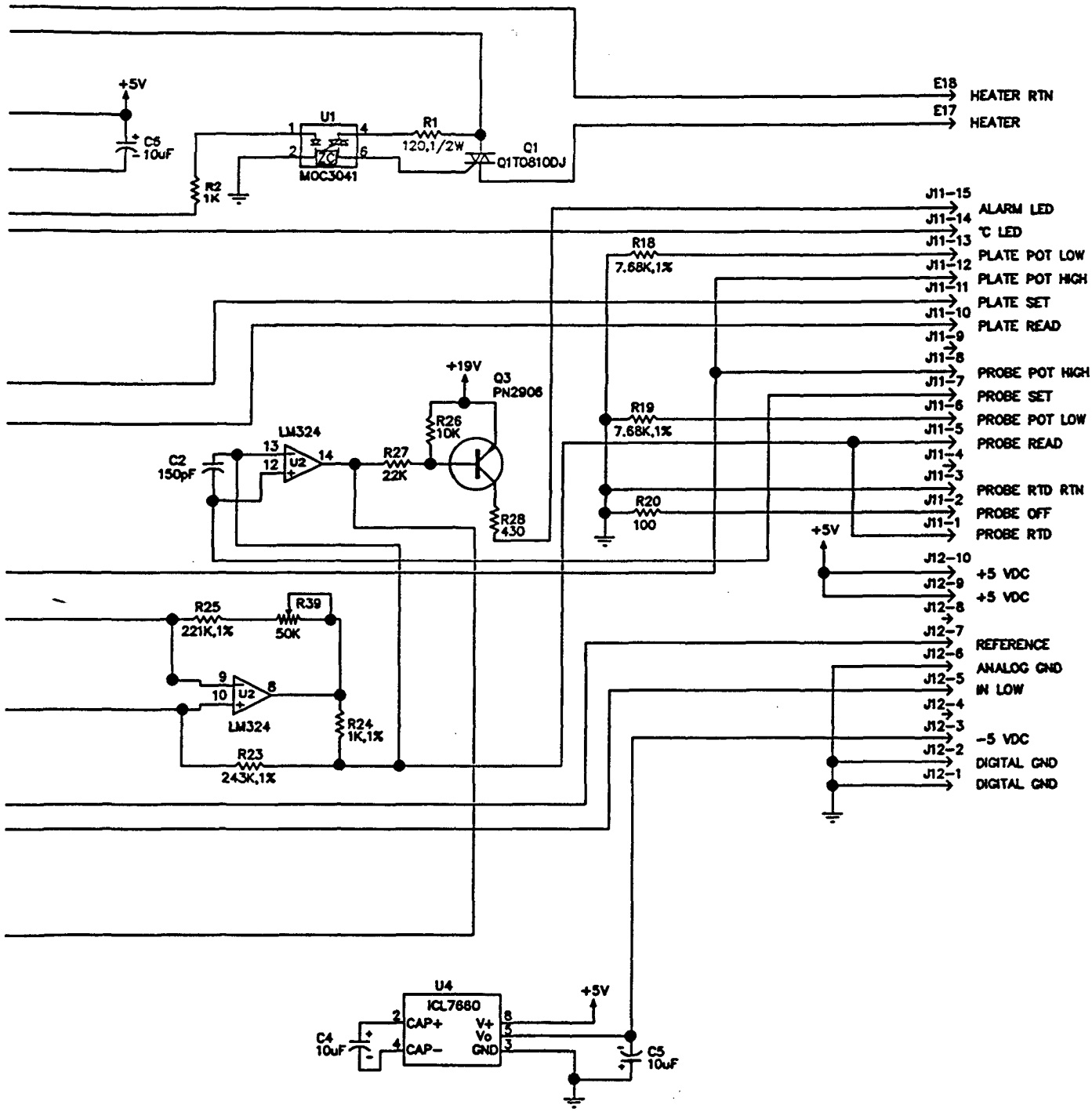

HS 150 Main Board , Page 2 of 2

BLANK

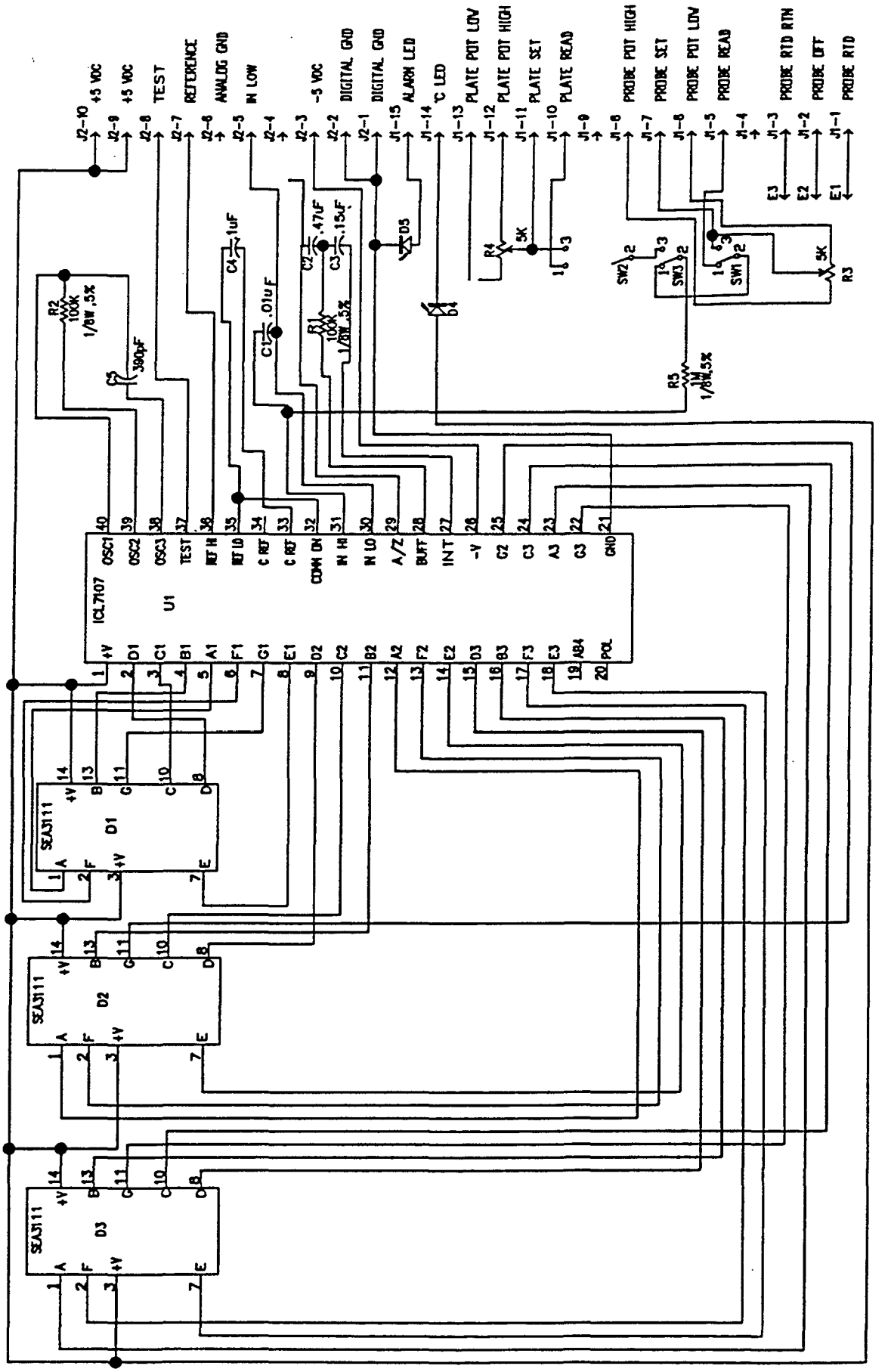

HS 150 Display Board

PACE®
INCORPORATED
Systems for Development, Production and Repair of Electronic Assemblies

Additional copies of this manual or other PACE literature may be obtained from:

PACE Incorporated
Sales Administration
9893 Brewers Court
Laurel MD 20723-1990

(301) 490 - 9860
(301) 498 - 3252 Fax

©1994 PACE Incorporated, Laurel MD. All rights reserved. Printed in the U.S.A.